ALFIX
SECURELY SCAFFOLDED

ALFIX MODUL MULTI

Catalogue and Price List

Tried and tested wedge lock design concept.

Positive and non-positive connectors replace the time-consuming screwed connections.

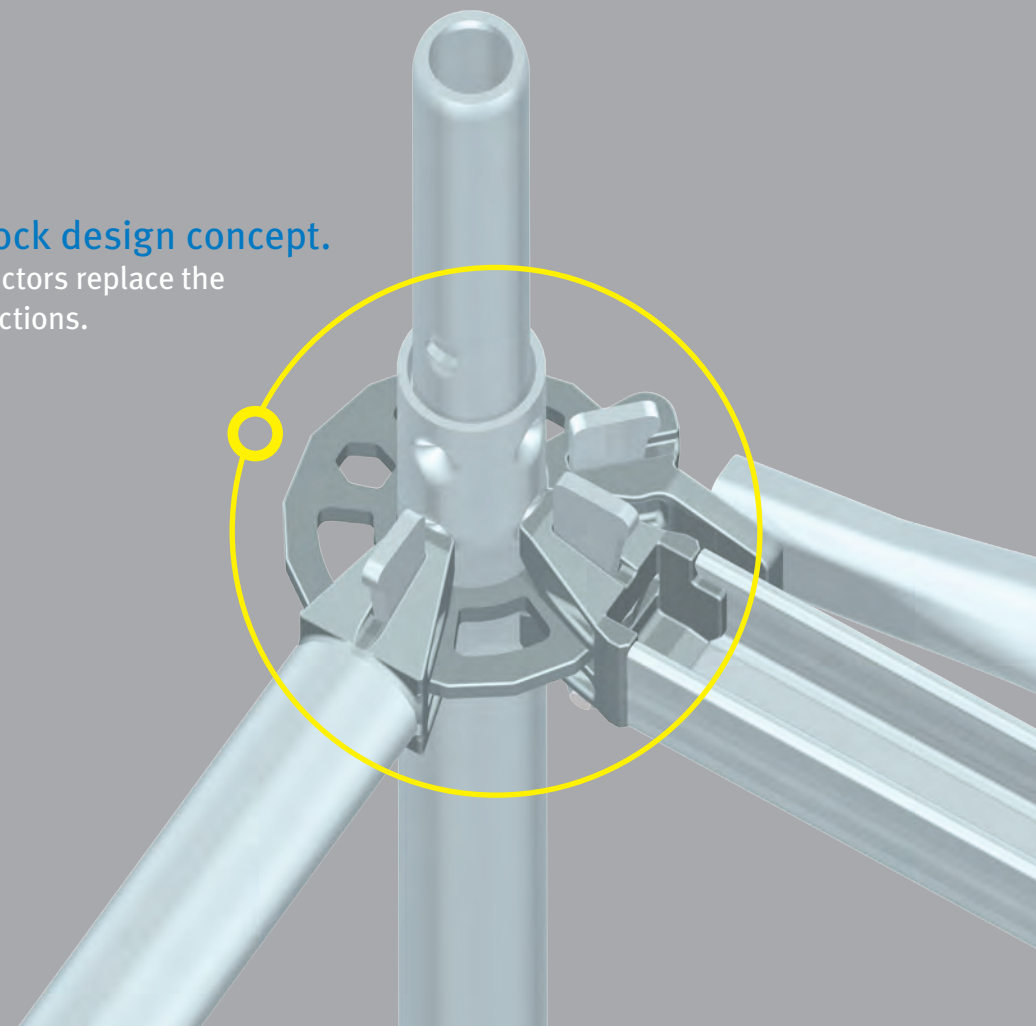

CONTENTS

ALFIX MODUL MULTI

ALFIX Scaffolding Connector p. 02

ALFIX Scaffolding System p. 03

ALFIX MODUL MULTI PRICE LIST

Vertical Support Elements p. 04

Horizontal Support Elements / Side Protection p. 08

Diagonal Bracing p. 16

Scaffolding Decks / Hatch-Type Access Decks p. 18

Brackets p. 24

Lattice Girders p. 26

Stairways / Ladders / Guardrails p. 28

Accessories p. 36

TECHNICAL DETAILS

Connector Forces p. 38

Loadability of Ledgers p. 39

Cross-section Values of Base Jacks p. 40

Load Classes of Scaffolding Decks p. 40

Parameters of Horizontal Diagonal Braces p. 40

Extracts from the DIN EN 12811 Standard p. 41

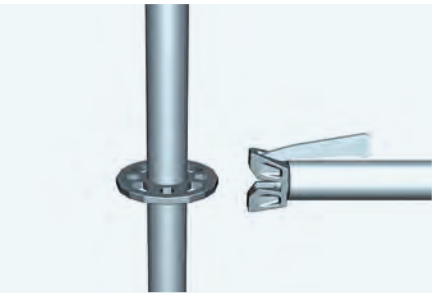

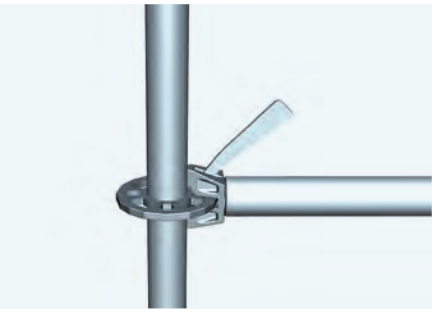

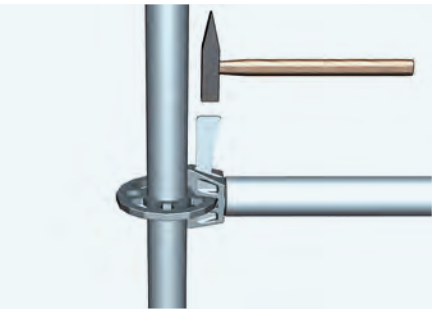

The key element of the ALFI MODUL MULTI system is the ALFIX Modul connector. The tried and tested wedge lock design concept caters for positive and non-positive connectors which increasingly replace the time-consuming screwed connections of conventional scaffolding. An ALFIX Modul connector can be found every 50 cm, providing eight connections and can be adjusted in all directions. The connectors' regular metric arrangement every 50 cm allows an almost arbitrary positioning of scaffolding platforms at all levels.

The load-bearing capacity and the rigidity of connector joints are insured by the certificate of approval no. Z-8.22-906. In addition, the system has official building authority approval for combinations (Z-8.22-913).

The data specified herein is for information only and will not constitute a commercial offer. For contingent misprints in article numbers, article descriptions as well as prices, no liability is assumed. Subject to alterations. All rights remain with the publisher. Any reproduction, either in whole or in part, requires the prior written permission of the publisher.

All prices shall be understood to be net plus statutory VAT. With the publishing of the catalogue on hand, any previous issue becomes invalid.

ALFIX Modul Multi Catalogue and Price List

Edition: April 2017

ALFIX MODUL MULTI

The ALFIX MODUL MULTI modular scaffolding system can be used for simple façades, complex industrial structures, and sophisticated supporting structures. The highest measure of ingenious technology and an easy-to-handle system enable a fast, cost-effective and versatile implementation of most diverse scaffolding designs. This modular scaffolding system is so versatile it can be used for complicated layouts at varying heights.

ALFIX modular systems are available in two versions: ALFIX MODUL MULTI of 1.57-2.07-2.57-3.07 m and ALFIX MODUL METRIC of 1.50-2.00-2.50-3.00 m.

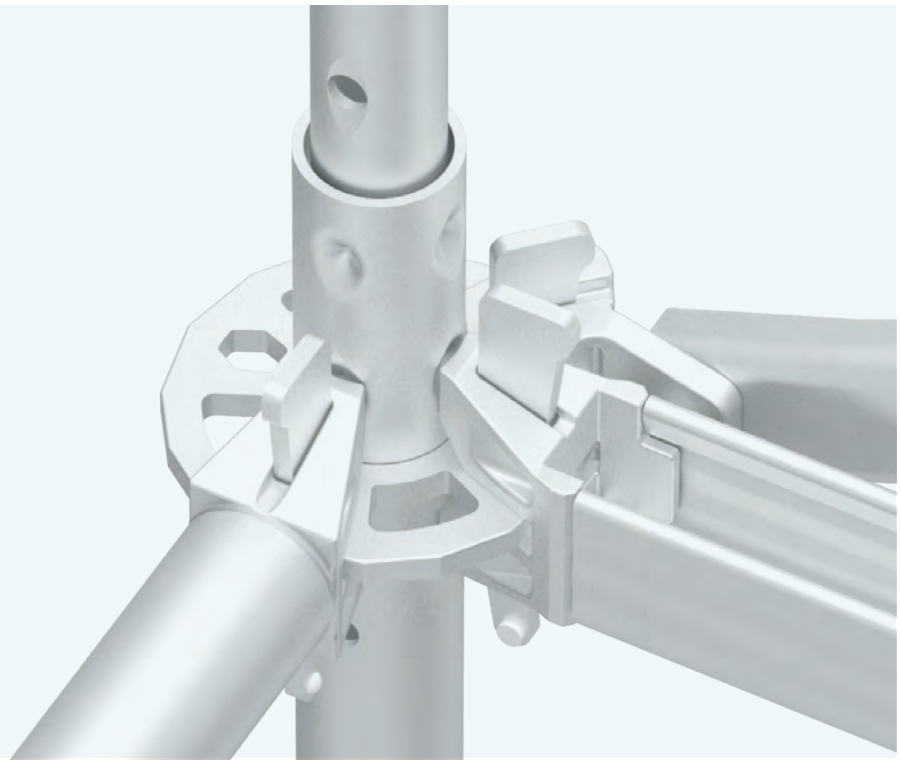

Perforated steel disc with 4 small openings for rectangular positioning of ledgers and 4 wide openings for aligning ledgers or diagonal braces at angles above or below 90°. Detailed information regarding the connectors' load-bearing capacity can be found on page 38.

Technical approvals:

ALFIX MODUL MULTI (Z-8.22-906)

ALBLITZ MODUL (Z-8.22-913)

Assembly options for applications as a load class 3 façade scaffolding with 0.73 m bay width, or load class 4 scaffolding with 1.09 m bay width, can be taken from the technical approval Z-8.22-906 and the corresponding instructions for assembly and use.

VERTICAL SUPPORT ELEMENTS

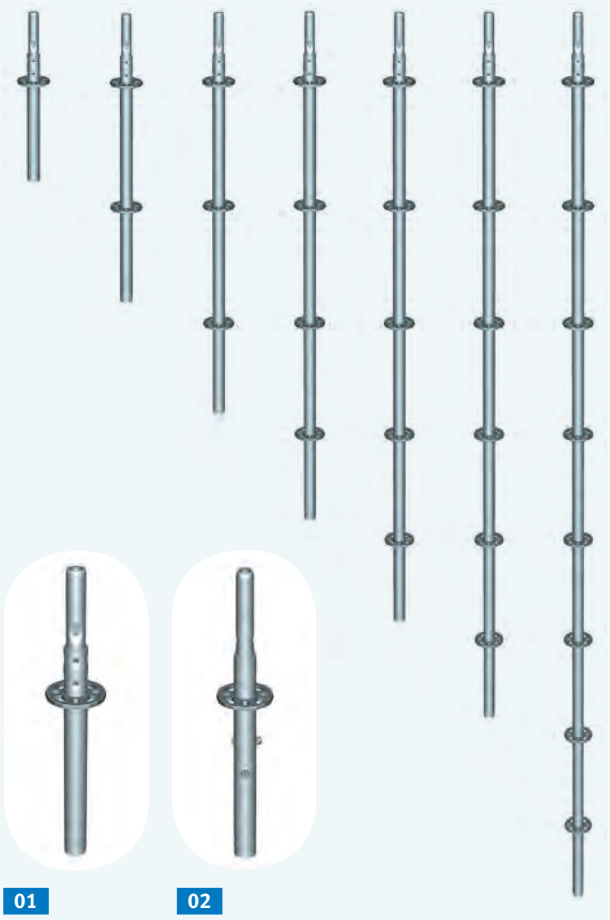

01 02

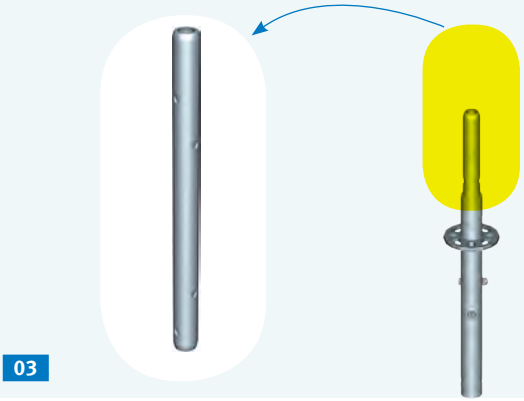

03

APPLICATION EXAMPLE

06 Upper part for passageway frame

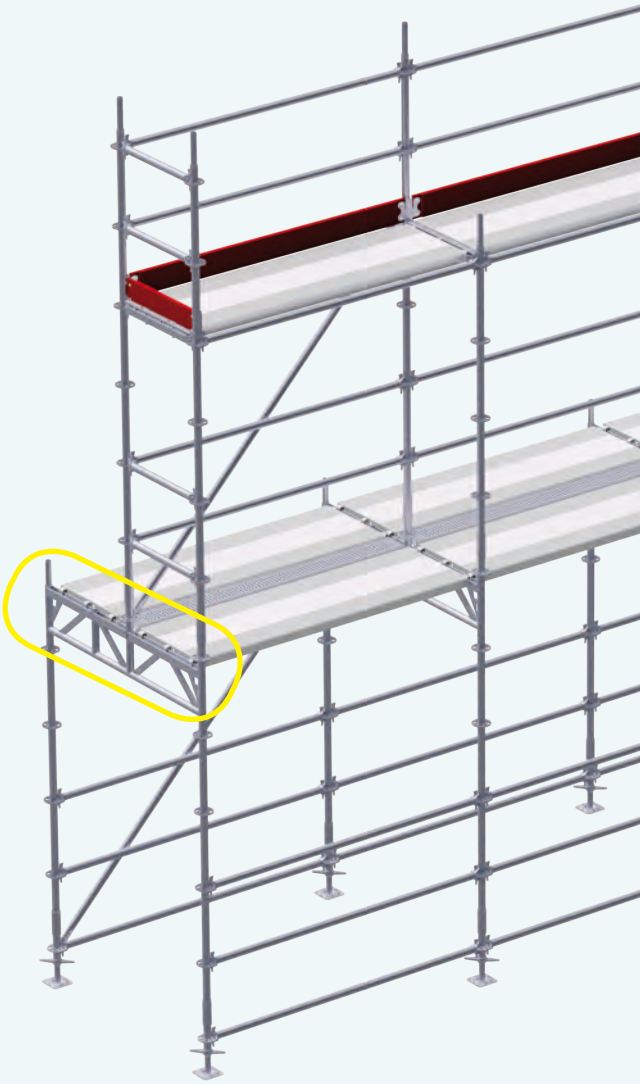

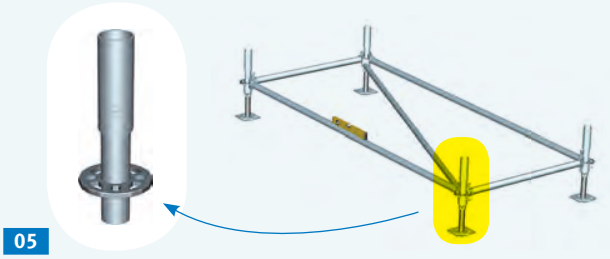

05

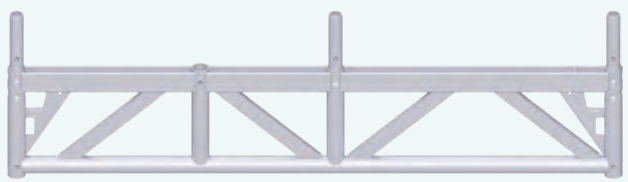

06

FIG.	DESCRIPTION	DIMENSIONS L/HXW [M]	WEIGHT approx. [kg]	ARTICLE NO.	PRICE [€]
01	**Vertical upright** with pressed-in spigot fitting (SF)* steel tube 48.3 mm x 3.2 mm, hot-dip galvanised – perforated discs every 50 cm – distance from tubings' lower edge to first perforated disc: 40 cm	0.50	3.2	40 04 050	**17.70**
		1.00	5.5	40 04 100	**22.60**
		1.50	7.7	40 04 150	**32.20**
		2.00	10.1	40 04 200	**37.00**
		2.50	12.3	40 04 250	**50.40**
		3.00	14.6	40 04 300	**54.80**
		4.00	19.2	40 04 400	**70.20**
02	**Vertical upright** with screwed-in spigot fitting (SF)* steel tube 48.3 mm x 3.2 mm, hot-dip galvanised – for suspended scaffolds – including special bolts – perforated discs every 50 cm – distance from tubings' lower edge to first perforated disc: 40 cm	0.50	4.0	40 05 050	**26.90**
		1.00	6.2	40 05 100	**31.80**
		1.50	8.5	40 05 150	**41.40**
		2.00	10.8	40 05 200	**46.20**
		2.50	13.0	40 05 250	**59.60**
		3.00	15.3	40 05 300	**64.00**
		4.00	19.9	40 05 400	**82.50**
03	**Spigot fitting** steel tube, hot-dip galvanised as a spare part for vertical upright with screwed-in spigot fitting SF 520 spare part from 2008 (year of manufacture)	0.52	1.7	83 40 050	**9.20**
04	**Hexagon bolt M12 x 60 mm** steel, zinc-plated, incl. hexagon nut M12, self-locking (without fig.)		0.05	73 01 260	**0.70**
05	**Vertical starter piece** ⊕ steel, hot-dip galvanised – facilitates the horizontal alignment, racking of uprights by only one person	0.41	1.8	40 00 041	**10.60**
06	**Upper part for passageway frame** ⊕ steel ø 48.3 mm, hot-dip galvanised	1.57	23.2	83 10 059	**100.20**

* see page 39 for permissible upright loads

APPLICATION EXAMPLE

06 Upper part for passageway frame with
05 Vertical starter piece

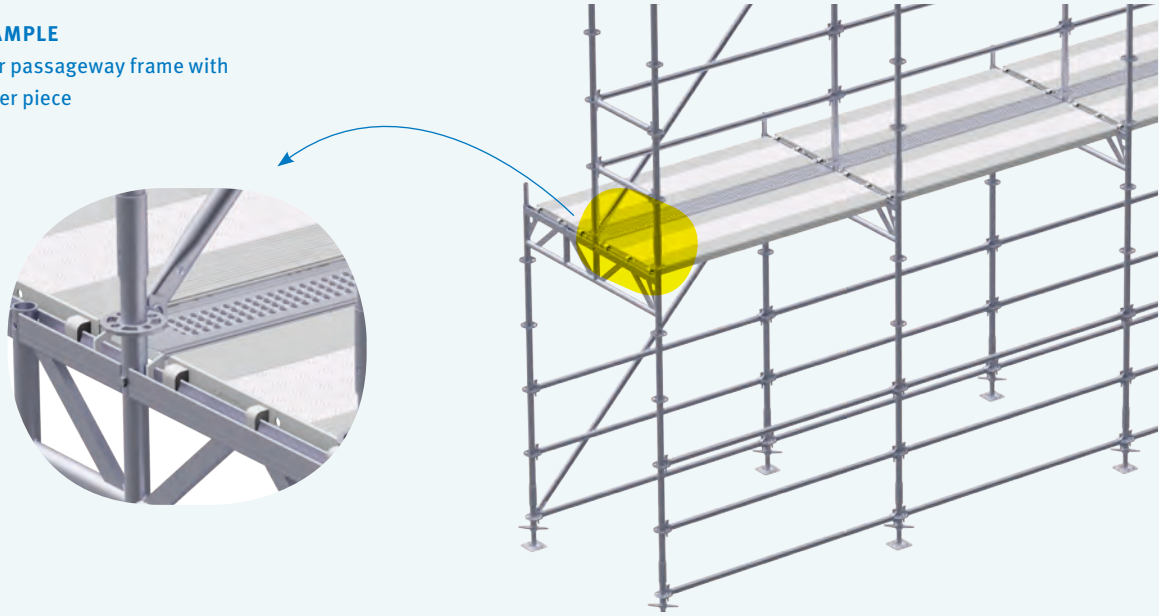

VERTICAL SUPPORT ELEMENTS

02 0.60 m

03

04

APPLICATION EXAMPLE

01 Head spindle "U"

05 Locking device for base jack

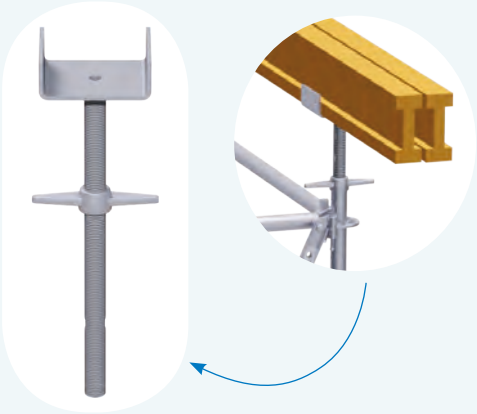

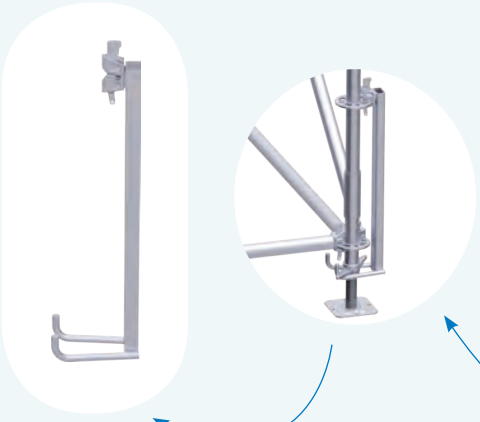

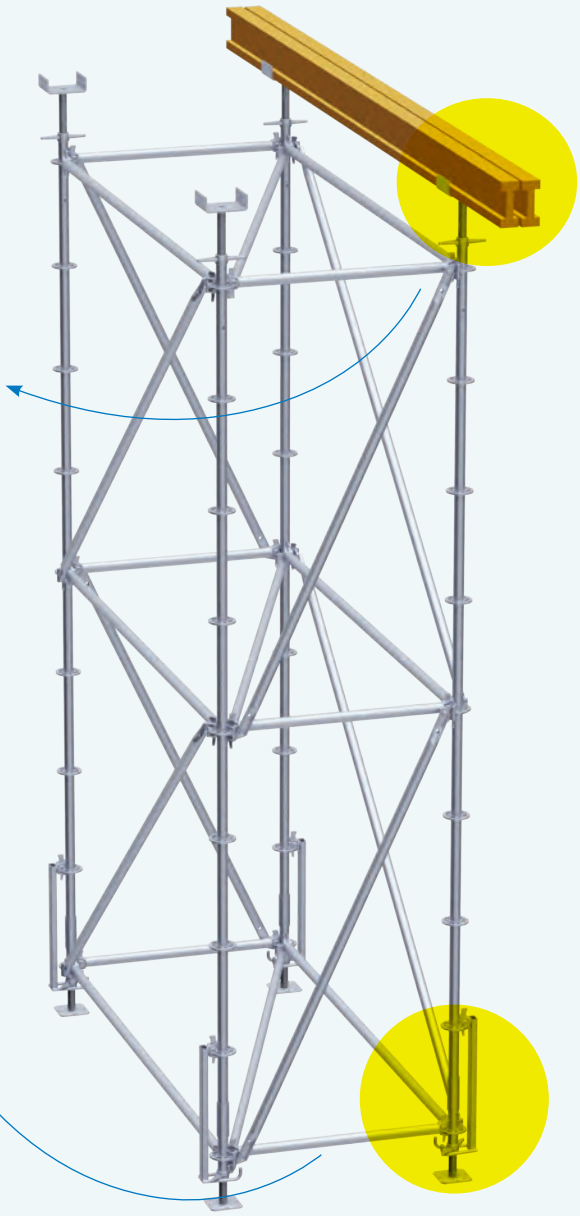

APPLICATION EXAMPLE

4a Suspended scaffolding connector

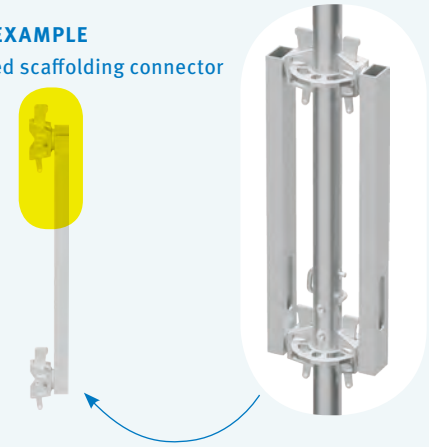

06

07

FIG.	DESCRIPTION	SPINDLE TRAVEL max.[m]	DIMENSIONS L/HXW [M]	WEIGHT approx. [kg]	ARTICLE NO.	PRICE [€]
01	**Head spindle "U"** ⊕ steel, hot-dip galvanised — opening width 174 mm, supporting length 160 mm, depth 62 mm — boreholes for fixing formwork girders	0.45	0.60	6.0	41 59 000	**34.30**
		0.75	1.00	8.0	41 59 100	**48.50**
02	**Base jack** steel, hot-dip galvanised — baseplate 15 x 15 cm — with smooth running tubular spindle ø 38 mm and grip nut — safety catch against removing	0.25	0.40	3.0	11 51 040	**13.65**
		0.45	0.60	3.6	11 51 060	**14.90**
		0.60	0.80	4.4	11 51 080	**21.40**
03	**Base jack, swivelling** steel, hot-dip galvanised	0.45	0.60	4.5	11 52 060	**33.20**
04	**Suspended scaffolding connector** ⊕ 4a steel, hot-dip galvanised — installation always in pairs — for securing vertical upright connections		0.60	3.0	48 75 060	**29.50**
	— for a secure connection of stairway tower modules (assemble flight by flight) 4b		0.80	3.6	48 75 080	**29.50**
05	**Locking device for base jack** ⊕ steel, hot-dip galvanised — ensures firm fit of base jacks during crane lifting operations		0.65	3.5	41 52 003	**22.00**
06	**Flanged roller** steel, zinc-plated, wheel type: plastic ø 200 mm — permissible max. load 10 kN — to be secured by a winged screw	0.35	0.50	6.5	14 12 007	**120.00**
07	**Flanged roller** ⊕ steel, zinc-plated, wheel type: plastic ø 200 mm — permissible max. load 7 kN		0.60	6.7	14 12 005	**223.50**

APPLICATION EXAMPLE

07 Flanged roller

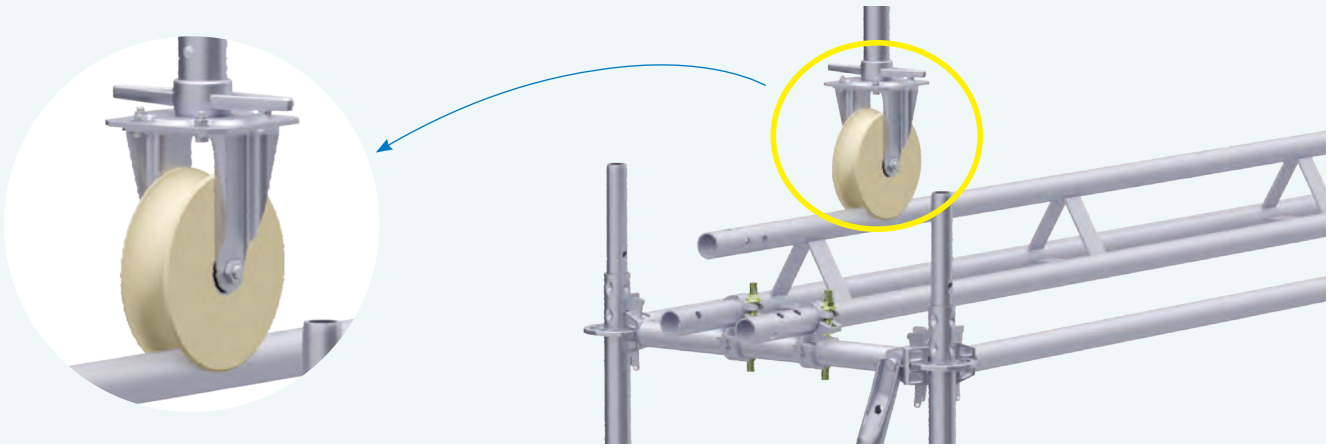

HORIZONTAL SUPPORT ELEMENTS / SIDE PROTECTION

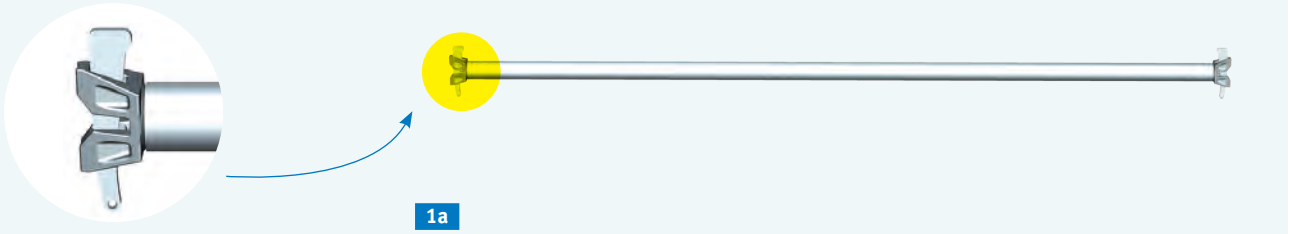

1a

1b

02

3a

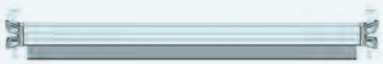

3b

04

APPLICATION EXAMPLE

05 Deck retainer

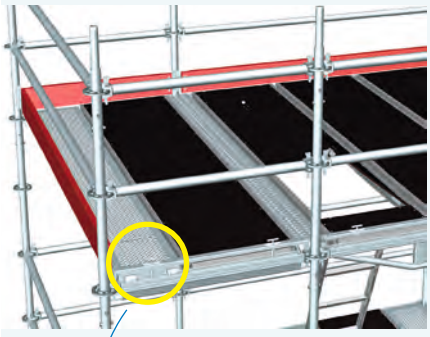

05

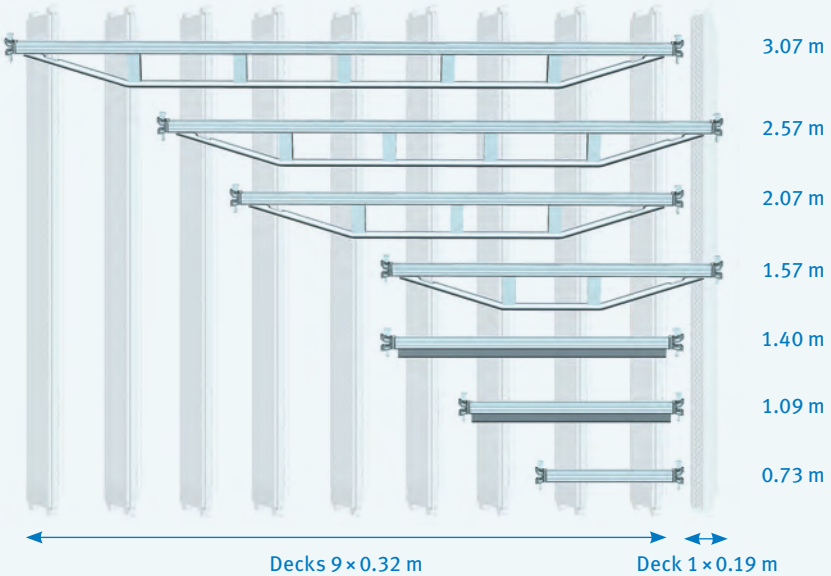

NOTE for all ledger types:

WEDGE LOCK CONNECTION

positive and non-positive connection, without screwed connections

APPLICATION EXAMPLE: LEDGER ALLOCATION

U-bridging ledger 1.57 m: 4 x 0.32 m decks and 1 x 0.19 m deck

Note: Any 2 x 0.32 decks can be replaced by a 1 x 0.61 m deck

FIG.	DESCRIPTION		DIMENSIONS L/HXW [M]	WEIGHT approx. [kg]	ARTICLE NO.	PRICE [€]
01	**Tube ledger*** steel tube 48.3 mm x 3.2 mm, hot-dip galvanised — available in different lengths — reinforced ledgers for use of higher loads — usable as horizontal connecting element, side protection and - in reinforced design - as deck ledger — colour code to indicate the bay length (see p. 16)	1a Tube ledger	0.36	1.8	40 60 036	**21.70**
			0.39	2.0	40 60 039	**21.70**
			0.45	2.3	40 60 045	**21.70**
			0.73	3.2	40 60 073	**17.50**
			1.04	4.2	40 60 104	**20.90**
			1.09	4.5	40 60 109	**20.90**
			1.29	5.0	40 60 129	**25.60**
			1.40	5.6	40 60 140	**25.60**
			1.57	6.3	40 60 157	**25.60**
			2.07	8.1	40 60 207	**29.90**
			2.57	9.9	40 60 257	**34.10**
			3.07	11.8	40 60 307	**38.50**
			4.14	16.5	40 60 414	**55.90**
		1b Tube ledger, reinforced	1.09	5.9	40 61 109	**43.50**
			1.29	7.1	40 61 129	**37.00**
			1.40	8.0	40 61 140	**51.00**
02	**Double tube ledger*** steel tube 48.3 mm x 3.2 mm, hot-dip galvanised — for higher loads — locating element for decks with tube fixture and integrated deck retainer (see p. 18 - 21)		1.57	9.8	40 61 157	**52.50**
			2.07	12.7	40 61 207	**63.50**
			2.57	16.4	40 61 257	**74.50**
			3.07	19.5	40 61 307	**85.50**
03	**U-transom*** ⊕ steel, hot-dip galvanised — locating element for standard decks safeguarded against lifting by deck retainers	3a U-transom	0.45	2.0	40 65 045	**20.70**
			0.73	3.0	40 65 073	**20.10**
		3b U-transom, reinforced	1.04	6.0	40 65 104	**29.40**
			1.09	6.2	40 65 109	**29.40**
			1.29	7.3	40 65 129	**35.90**
			1.40	7.9	40 65 140	**54.90**
04	**U-bridging ledger*** steel, hot-dip galvanised		1.57	9.2	40 65 157	**56.60**
			2.07	12.4	40 65 207	**67.80**
			2.57	15.1	40 65 257	**78.60**
			3.07	18.1	40 65 307	**89.70**
05	**Deck retainer** ⊕ steel, hot-dip galvanised — for safeguarding against lifting of 03 U-transoms, 04 U-bridging ledgers used on the deck ledgers. If deck retainers are used in façade scaffolding (see standard design, technical approval/instructions for assembly and use) it can be abstained from using tube ledgers on deck level.		0.45	0.8	40 98 045	**10.60**
			0.73	1.4	40 98 073	**15.60**
			1.09	1.9	40 98 109	**17.20**
			1.40	2.5	40 98 140	**33.00**
			1.57	2.9	40 98 157	**34.80**
			2.07	3.9	40 98 207	**40.20**
			2.57	4.8	40 98 257	**45.60**
			3.07	5.4	40 98 307	**51.00**

* see page 39 for permissible loads

HORIZONTAL SUPPORT ELEMENTS / SIDE PROTECTION

APPLICATION EXAMPLE:

04 RECESS BRACKET HOLDER

Per storey, two recess bracket holders are placed onto the decks and fixed with tensioning screws. The holders fit on every scaffold deck. Their arrangement must insure that the recess can be secured by a grid-like decking and that the sideways recess gap does not exceed 30 cm, according to the scaffolding regulations. Uprights are vertically fixed to the halfcouplers, which are then integrated into the holder, across two or more (depending on recess brackets) storeys. The uprights serve for fixing the brackets at the appropriate height.

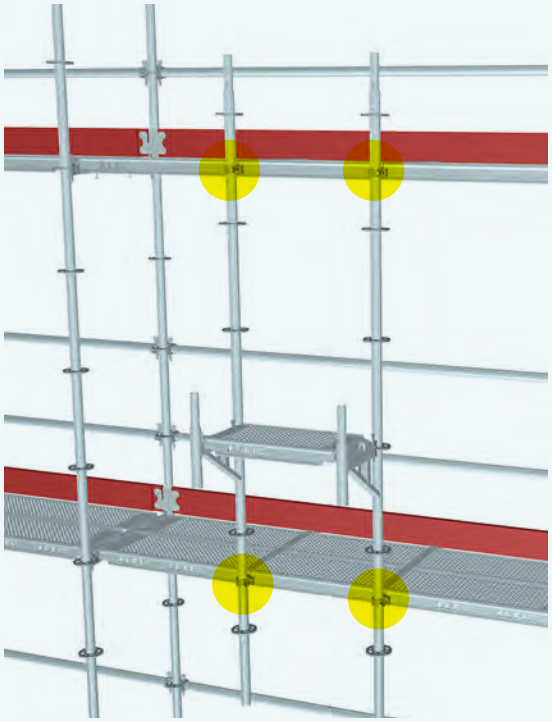

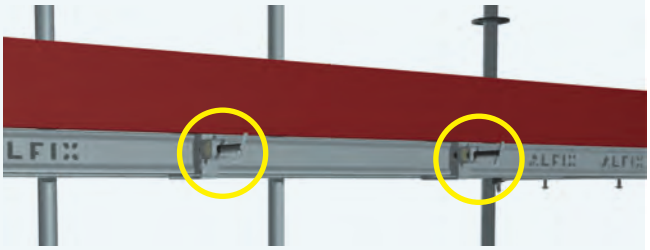

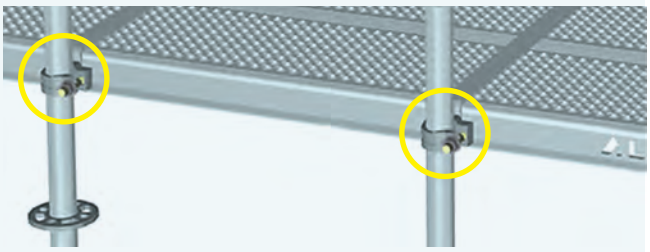

1a

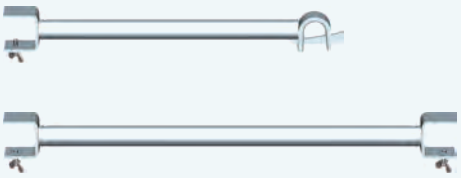

1b

2a

2b

3a

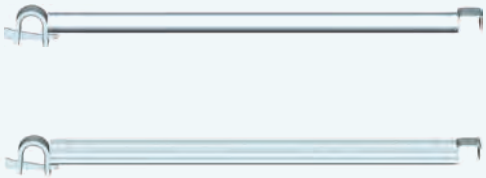

3b

04

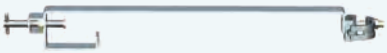

05

APPLICATION EXAMPLE

3a DECK AND PLANK LEDGER in combination with system-free decks

FIG.	DESCRIPTION		DIMENSIONS L/HXW [M]	WEIGHT approx. [kg]	ARTICLE NO.	PRICE [€]
01	**Intermediate deck ledger** steel, hot-dip galvanised — for decks with circular tube fixtures	1a Egde design each one side-bearing on tube ledger / fastening to steel decks	0.64	3.9	40 53 064	**27.90**
			0.96	5.1	40 53 096	**31.70**
		1b Centre design fastening to steel decks on both sides	0.64	4.2	40 51 064	**27.90**
			0.96	5.4	40 51 096	**31.70**
02	**Intermediate deck ledger U** steel, hot-dip galvanised — for system-compatible decks	2a Egde design each one side-bearing on tube ledger / fastening to steel decks	0.32	2.7	40 54 032	**25.20**
			0.64	4.0	40 54 064	**27.90**
			0.96	7.5	40 54 096	**52.50**
		2b Centre design ⊕ fastening to steel decks on both sides	0.32	3.0	40 52 032	**25.20**
			0.64	4.1	40 52 065	**35.50**
			0.96	5.2	40 52 097	**52.50**
03	**Deck and plank ledger** ⊕ steel, hot-dip galvanised — for laying on both sides of the tube ledgers — application preferably for system-free decks or for creating openings within the scaffolding deck when planks with tube fixtures are used — also suitable as side protection — permissible distributed load must be observed	3a Version with tube fixture for decks with circular tube fixture	0.73	3.4	40 50 073	**19.30**
			1.09	4.7	40 50 109	**22.00**
			1.57	7.8	40 50 157	**31.20**
			2.07	9.9	40 50 207	**38.60**
			2.57	12.1	40 50 257	**46.10**
			3.07	14.6	40 50 307	**53.00**
		3b U-profile version for system-compatible decks	0.73	3.0	40 55 073	**31.90**
			1.09	4.1	40 55 109	**52.50**
04	**Recess bracket holder** ⊕ with integrated halfcoupler — for all scaffolding systems up to width class W06 and W09		0.70	2.3	14 51 060	**29.95**
			1.00	2.9	14 51 100	**36.20**
05	**Recess bracket starting piece**		0.35	1.7	14 40 000	**5.75**

APPLICATION EXAMPLE
2b INTERMEDIATE DECK LEDGER U
in centre design to be applied in steel decks

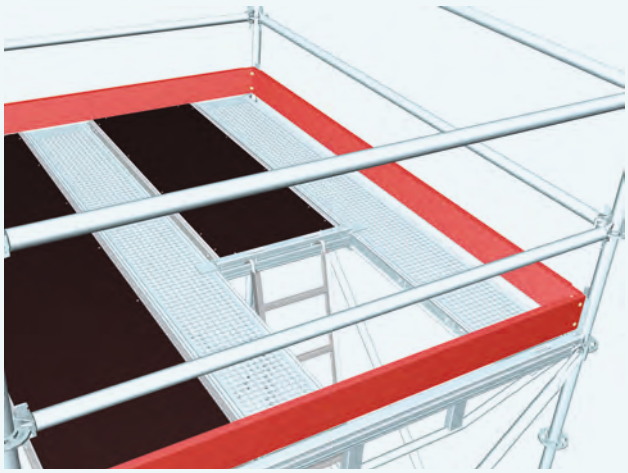

APPLICATION EXAMPLE 3a DECK AND PLANK LEDGER
facilitates the creation of hatch-type access by using shorter decks within a longer bay

HORIZONTAL SUPPORT ELEMENTS / SIDE PROTECTION

01

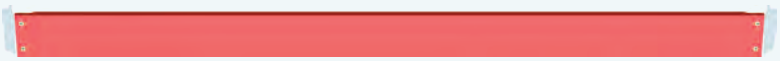

02

03

04

rolled

APPLICATION EXAMPLE

01 **TOEBOARD** with system-compatible decks

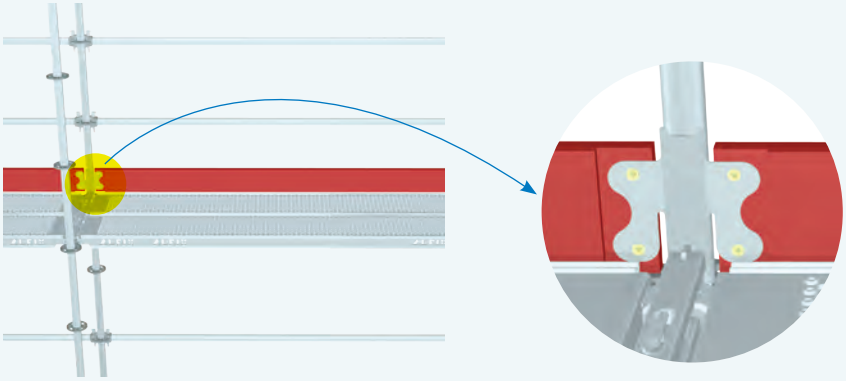

05

APPLICATION EXAMPLE
FAÇADE SCAFFOLDING ALFIX MODUL MULTI

01 **TOEBOARD,** wood
04 **GUARD NET SYSTEM**
05 **DOUBLE-END GUARDRAIL**

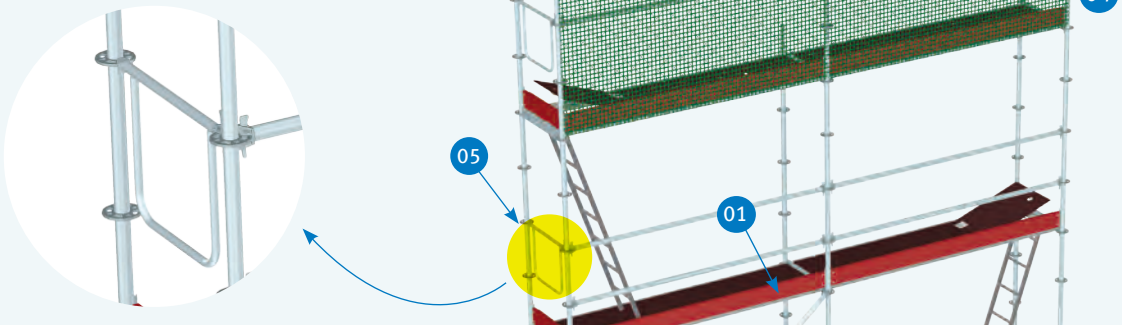

FIG.	DESCRIPTION	DIMENSIONS L/HXW [M]	WEIGHT approx. [kg]	ARTICLE NO.	PRICE [€]
01	**Toeboard, wood** ⊕ framed with fittings, height 15 cm — impregnated — applicable when system-compatible decks (U-ledger) and decks with tube fixture (tube ledger) are used — fixture of toeboards between vertical upright and wedge	0.73	1.6	40 95 073	**13.00**
		1.09	2.3	40 95 109	**13.50**
		1.29	2.7	40 95 129	**20.40**
		1.40	3.0	40 95 140	**13.90**
		1.57	3.3	40 95 157	**14.40**
		2.07	4.2	40 95 207	**15.50**
		2.57	5.3	40 95 257	**16.70**
		3.07	6.3	40 95 307	**17.70**
		4.14	8.1	40 95 414	**30.60**
02	**Toeboard, steel** height 15 cm — applicable when system-compatible decks (U-ledger) and decks with tube fixture (tube ledger) are used — fixture of toeboards between vertical upright and wedge — for special requirements, e.g. for industrial scaffoldings (fire retardancy)	0.73	1.6	40 96 073	**15.00**
		1.09	2.3	40 96 109	**18.30**
		1.29	2.7	40 96 129	**21.50**
		1.40	2.9	40 96 140	**21.50**
		1.57	3.3	40 96 157	**23.10**
		2.07	4.3	40 96 207	**27.30**
		2.57	5.3	40 96 257	**32.20**
		3.07	6.3	40 96 307	**37.00**
03	**Cross toeboard with tube fixture, wood** framed with fittings, height 15 cm, impregnated — applicable when decks with tube fixture are used — fixture of toeboards between vertical upright and wedge	0.73	1.8	40 97 073	**13.00**
		1.04	2.4	40 97 104	**13.50**
		1.09	2.5	40 97 109	**13.50**
		1.29	2.9	40 97 129	**20.40**
		1.40	3.1	40 97 140	**13.90**
		1.57	3.5	40 97 157	**14.40**
		2.07	4.5	40 97 207	**15.50**
		2.57	5.5	40 97 257	**16.70**
		3.07	6.5	40 97 307	**17.70**
04	**Guard net system** * height 2.00 m, green, mesh size 100 mm — incl. tube ledger (at the top), aluminium tube 40 mm (at the bottom), spigot fitting for bay-by-bay extension, two fixing cords (left and right)	2.07	13.0	40 76 207	**139.20**
		2.57	14.0	40 76 257	**164.00**
		3.07	15.0	40 76 307	**176.90**
05	**Double-end guardrail** steel tube ø 33.7 mm, hot-dip galvanised — usable as end side protection for façade scaffolding Modul	0.73	3.5	40 62 073	**40.90**
		1.09	4.2	40 62 109	**41.40**

* see the ALFIX Accessories Catalogue for alternative system-independent nets

HORIZONTAL SUPPORT ELEMENTS / SIDE PROTECTION

1b

02

03

04

APPLICATION EXAMPLE

04 ADVANCED GUARDRAIL POST
05 ADVANCED TELESCOPIC GUARDRAIL

— safety device for scaffold assembly / dismantling
— suitable for all compatible scaffolding systems
— for proper usage, see Instructions for Assembly and Use or the provisions of the employer's liability insurance association for construction sites (BG Bau)

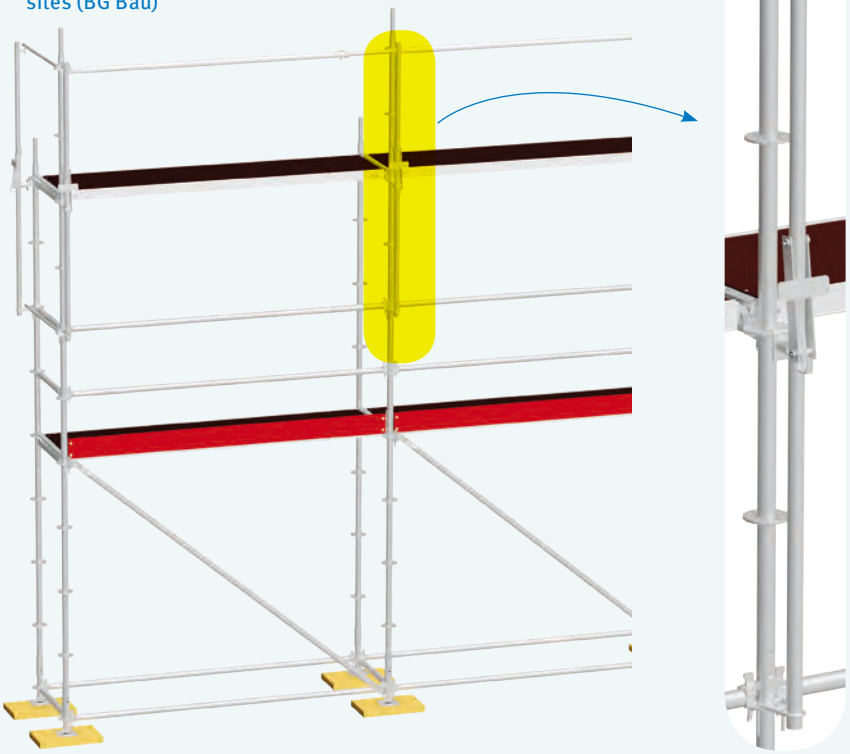

05

FIG.	DESCRIPTION		DIMENSIONS L/HXW [M]	WEIGHT approx. [kg]	ARTICLE NO.	PRICE [€]
01	**Safety helmet with chin straps**	1a white		0.4	37 50 018	**70.15**
		1b yellow		0.4	37 50 024	**70.15**
02	**Tool bag for scaffolding ratchets** — with integrated Pivot Link™ connection for a secure connection to the safety harness				37 50 017	**16.25**
03	**Personal fall protection equipment (PPE)** EN 354 / 355 / 361 / 363, connecting means sharp-edge resistant — Revolution R2 Scaff belt, 2.50 m, Manyard Edge lanyard — with integrated Pivot Link™ connection at waist level for a secure connection of accessories, e. g. 02 tool bag				37 67 009	**258.65** Special net price
04	**Advanced guardrail post** ⊕ steel, hot-dip galvanised			6.8	40 78 000	**60.60**
05	**Advanced telescopic guardrail** aluminium and steel, hot-dip galvanised — incl. hinged pin with snap-in locking mechanism to ensure transportation safety		2.50 – 3.07	7.9	14 43 200	**51.50** Special net price

APPLICATION EXAMPLE

04 ADVANCED GUARDRAIL POST

— self-locking during installation
— with convenient foot release

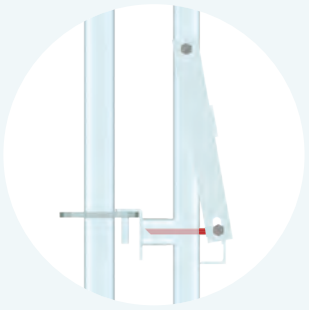

unlocked

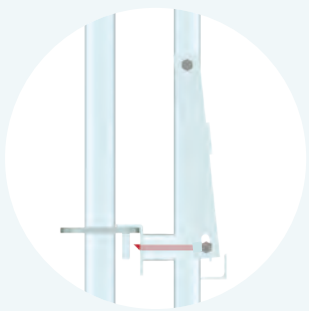

locked

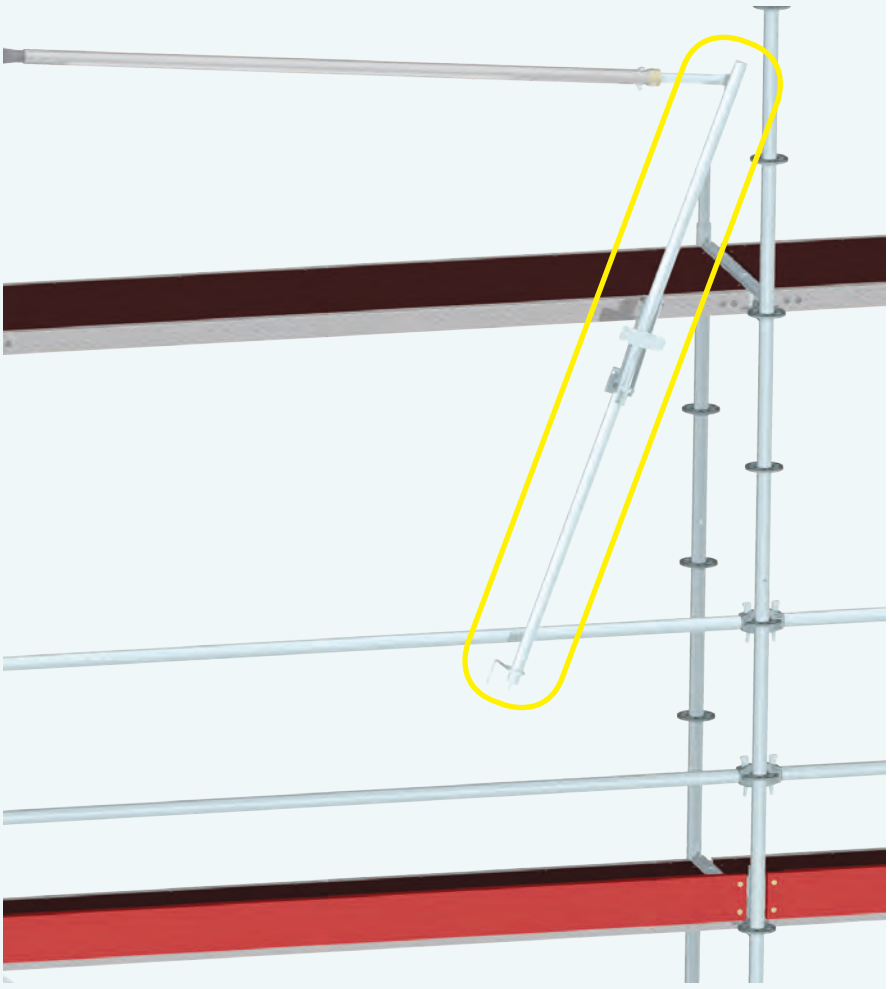

DIAGONAL BRACING

Vertical diagonal braces

Different bay lengths
Colour coded indication of bay length:

0.73 m	1.09 m	1.29 m	1.40 m
1.57 m	2.07 m	2.57 m	3.07 m

Installation height is indicated by the number of stripes (up to 4) on the component sticker:

2.00 m
1.50 m
1.00 m
0.50 m

(Example: 1.09 x 2.00 m)

Horizontal diagonal braces

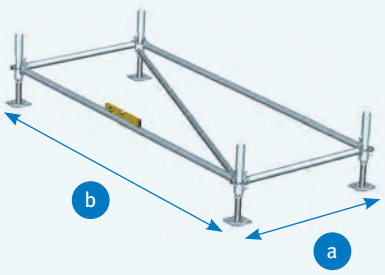

for aligning the scaffolding structure at right angles and for horizontal bracing of surface-oriented birdcage scaffolds

a 0.73 – 3.07 m
b 0.73 – 3.07 m

01 VERTICAL DIAGONAL BRACES
32 diagonal dimensions available
Additional dimensions available upon request.

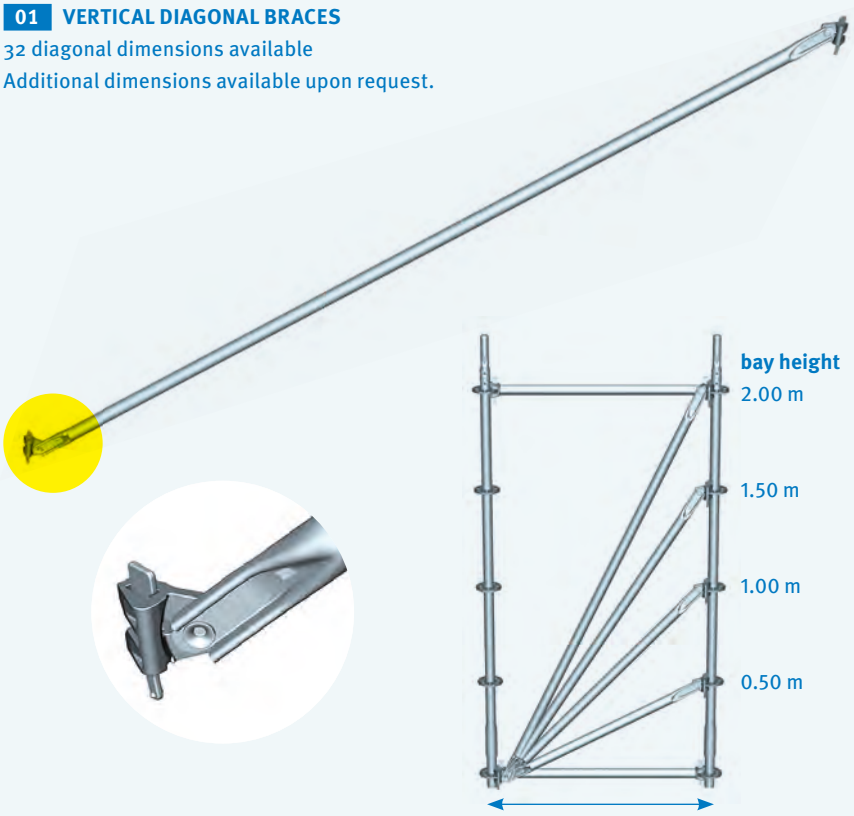

bay length
0.73 m, 1.09 m, 1.29 m, 1.40 m,
1.57 m, 2.07 m, 2.57 m, 3.07 m

Stickers on tube ledgers for quick and easy indication of bay length and on diagonal braces for specifying bay length and installation height.

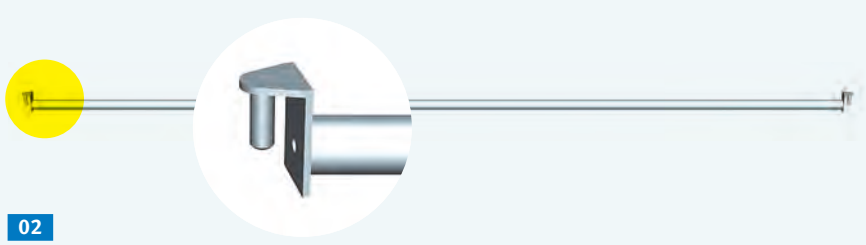

02

03

FIG.	DESCRIPTION		DIMENSIONS L/HXW [M]	WEIGHT approx. [kg]	ARTICLE NO.	PRICE [€]
01	**Vertical diagonal brace*** steel tube 48.3 mm x 2.7 mm, hot-dip galvanised — wedge lock principle for positive and non-positive connections — without screwed connections — for bracing the basic scaffold	for bay height 2.00 m	0.73	7.5	40 21 200	**34.80**
			1.09	7.8	40 22 200	**35.50**
			1.40	8.3	40 23 200	**36.00**
			1.57	8.8	40 24 200	**36.50**
			2.07	9.7	40 25 200	**38.10**
			2.57	10.9	40 26 200	**40.70**
			3.07	12.2	40 27 200	**43.40**
		for bay height 1.50 m	1.57	7.7	40 24 150	**38.60**
			2.07	8.8	40 25 150	**40.30**
			2.57	10.0	40 26 150	**42.80**
			3.07	11.0	40 27 150	**45.80**
		for bay height 1.00 m	1.57	6.5	40 24 100	**37.40**
			2.07	7.8	40 25 100	**39.10**
			2.57	9.0	40 26 100	**41.70**
			3.07	10.3	40 27 100	**44.70**
		for bay height 0.50 m	1.57	6.0	40 24 050	**36.30**
			2.07	7.4	40 25 050	**38.00**
			2.57	8.8	40 26 050	**40.40**
	Custom dimensions available upon request.		3.07	10.0	40 27 050	**43.40**
02	**Horizontal diagonal brace** ⊕ steel tube 42.4 mm x 2 mm, hot-dip galvanised — Available for any possible combination of [bay length] x [bay width]! — screwless pin fixing — for horizontal bracing of scaffolds without planks	for bay length 2.07 m	0.73	4.8	40 45 073	**42.40**
			1.09	5.0	40 45 109	**46.60**
		for bay length 2.57 m	0.73	6.0	40 46 073	**51.50**
			1.09	6.3	40 46 109	**52.00**
		for bay length 3.07 m	0.73	6.6	40 47 073	**56.80**
			1.09	7.8	40 47 109	**56.30**
03	**Horizontal diagonal ledger** steel tube 48.3 mm x 3.2 mm, hot-dip galvanised — available in different lengths — wedge lock concept for positive and non-positive connections — without screwed connections — for horizontal bracing of birdcage scaffolds		1.57 × 1.57	8.5	40 44 158	**39.70**
			2.07 × 2.07	10.8	40 45 208	**49.40**
			2.57 × 2.57	13.3	40 46 258	**59.00**
			3.07 × 3.07	15.5	40 47 308	**68.70**

* see page 39 for permissible loads

SCAFFOLDING DECKS / HATCH-TYPE ACCESS DECKS

01

02

03

04

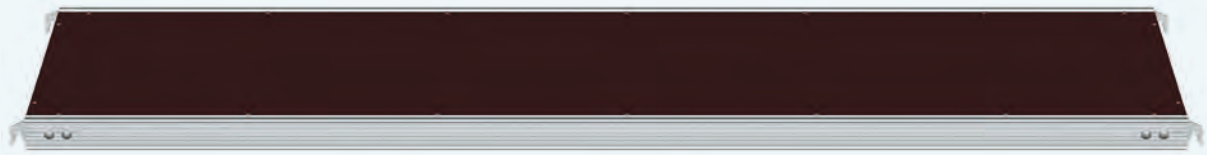

05

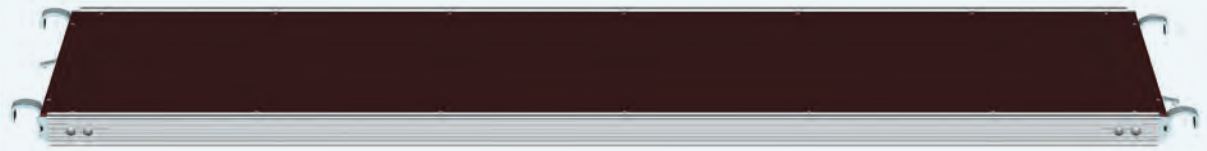

06

07

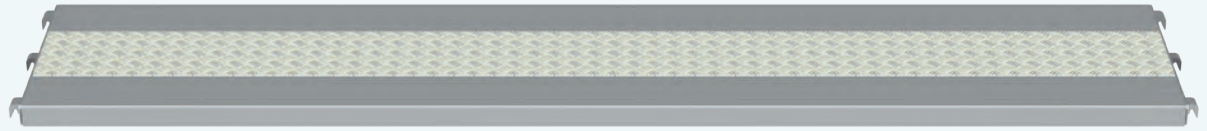

FIG.	DESCRIPTION	LOAD CLASS*	DIMENSIONS L/HXW [M]	WEIGHT approx. [kg]	ARTICLE NO.	PRICE [€]
01	**Steel deck, 0.32 m** hot-dip galvanised, perforated — high load-bearing capacity, non-slip surface	6	0.73 × 0.32	5.6	12 21 073	**44.90**
		6	1.09 × 0.32	8.1	12 21 109	**45.80**
		6	1.40 × 0.32	10.0	12 21 140	**47.10**
		6	1.57 × 0.32	11.4	12 21 157	**47.10**
		6	2.07 × 0.32	13.7	12 21 207	**52.80**
		5	2.57 × 0.32	17.1	12 21 257	**61.00**
		4	3.07 × 0.32	20.5	12 21 307	**69.20**
		3	4.14 × 0.32	32.1	12 21 414	**137.30**
02	**Steel deck with tube fixture, 0.32 m** hot-dip galvanised, perforated — with integrated deck retainer — with fixture for tube support	6	0.73 × 0.32	6.1	40 20 073	**45.60**
		6	1.09 × 0.32	8.6	40 20 109	**46.20**
		6	1.40 × 0.32	10.5	40 20 140	**54.30**
		6	1.57 × 0.32	11.9	40 20 157	**52.70**
		6	2.07 × 0.32	14.2	40 20 207	**60.40**
		5	2.57 × 0.32	17.6	40 20 257	**68.70**
		4	3.07 × 0.32	20.9	40 20 307	**77.80**
03	**Wooden deck, 0.32 m** — impregnated — triple bonding standard — thickness: 48 mm — secured by a system-compatible steel head piece at both ends	6	0.73 × 0.32	6.0	12 31 073	**27.00**
		6	1.09 × 0.32	8.6	12 31 109	**28.20**
		6	1.57 × 0.32	11.0	12 31 157	**38.50**
		5	2.07 × 0.32	14.5	12 31 207	**45.45**
		4	2.57 × 0.32	18.6	12 31 257	**50.80**
		3	3.07 × 0.32	23.0	12 31 307	**58.30**
04	**Frame platform, 0.60 m / 0.32 m** aluminium, screen-printed plywood plated surface (SPP) — extremely lightweight — standard width: 60 cm — replaceable fixture and deck	3	1.57 × 0.60	11.5	12 01 157	**103.50**
		3	2.07 × 0.60	14.5	12 01 207	**115.50**
		3	2.57 × 0.60	17.6	12 01 257	**131.80**
		3	3.07 × 0.60	20.7	12 01 307	**155.90**
		3	4.14 × 0.32	19.1	12 01 414	**163.30**
05	**Frame platform with tube fixture, 0.60 m / 0.32 m** aluminium, screen-printed plywood plated surface (SPP) — extremely lightweight — standard width: 60 cm — replaceable fixture and deck — with fixture for tube support	3	1.57 × 0.60	13.3	41 60 157	**124.90**
		3	2.07 × 0.60	16.3	41 60 207	**139.60**
		3	2.57 × 0.60	19.4	41 60 257	**158.70**
		3	3.07 × 0.60	22.5	41 60 307	**182.50**
		3	4.14 × 0.32	20.7	41 61 414	**188.50**
06	**Solid aluminium deck, 0.32 m** — made completely of aluminium, profile height: 48 mm — consisting of hollow chamber profiles with longitudinal non-skid grooves — stacking bead, enabling safe storing — stacking bead downwards, prevents water / ice deposition	6	1.09 × 0.32	4.7	12 11 109	**80.60**
		6	1.57 × 0.32	6.5	12 11 157	**87.80**
		6	2.07 × 0.32	8.4	12 11 207	**103.60**
		5	2.57 × 0.32	10.3	12 11 257	**119.40**
		4	3.07 × 0.32	12.2	12 11 307	**136.90**
		3	4.14 × 0.32	16.3	12 11 414	**183.35**
07	**ALBLITZ lightweight deck, 0.60 m** — profile height approx. 50 mm — combination of hollow chamber profiles and aluminium chequer plates — non-slip surface, easy to stack, extremely lightweight — with borehole ø 16 mm on the end face for load hooks (vertical transport)	4	1.57 × 0.60	11.7	12 13 157	**123.00**
		4	2.07 × 0.60	15.2	12 13 207	**149.00**
		4	2.57 × 0.60	18.2	12 13 257	**176.00**
		3	3.07 × 0.60	22.0	12 13 307	**199.90**

* A load class overview is available under "Technical Details" on pages 38 - 40.

SCAFFOLDING DECKS / HATCH-TYPE ACCESS DECKS

1a

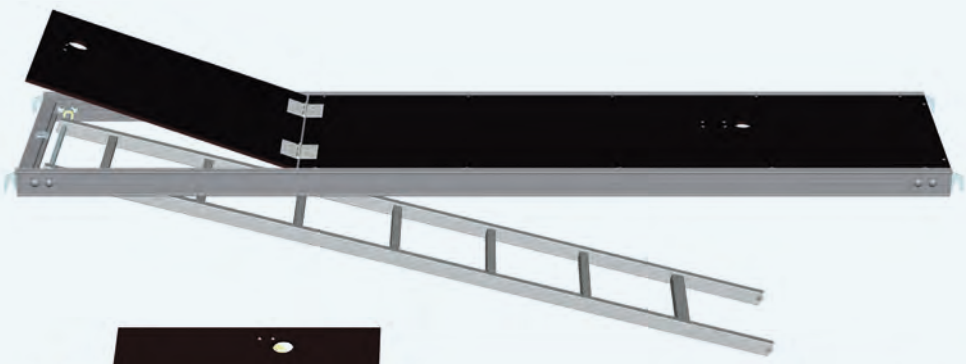

1b

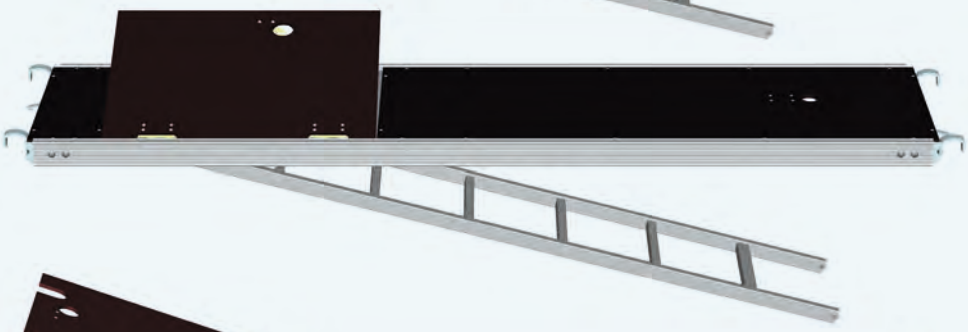

1c

1d

2a

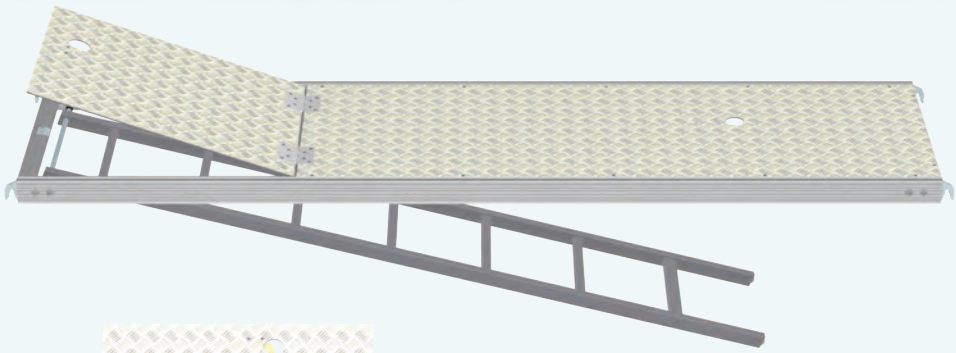

2b

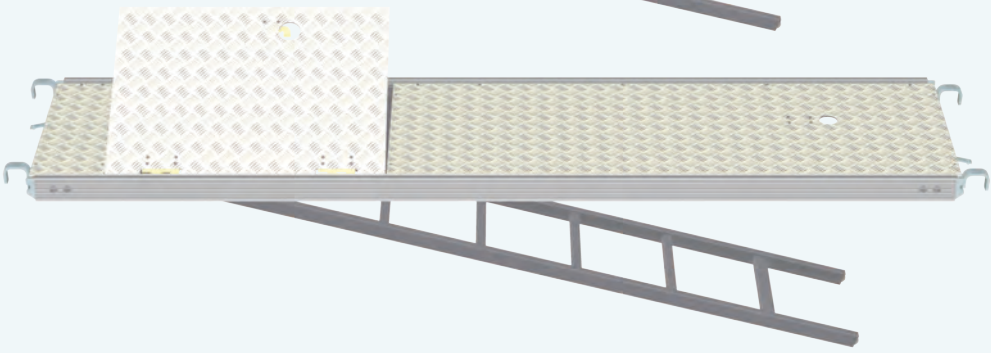

Note **Hatch-type access without ladder:** with hatch notches for fixing separate storey ladders (see p. 32 - 33), particularly suitable for ladder access ≤ 2.07 m.

NOTE If extensive material transport takes place through the scaffold access and the scaffold ascent height is more than 10 m, stairs are to be used for access!

FIG.	DESCRIPTION	LOAD CLASS*	DIMENSIONS L/HXW [M]	WEIGHT approx. [kg]	ARTICLE NO.	PRICE [€]
01	**Hatch-type access deck SPP, 0.60 m** aluminium, screen-printed plywood plated surface (SPP) – replaceable fixture and deck – convenient and fail-safe ladder and hatch latching					
1a	Version with ladder	3	2.57 × 0.60	20.9	12 04 257	**247.60**
	– with system fixture	3	3.07 × 0.60	24.0	12 04 307	**282.40**
1b	Version with tube fixture and ladder	3	2.57 × 0.60	23.4	41 63 257	**249.40**
	– with fixture for tube support & integrated deck retainer – shifted hatch-type access with step tread	3	3.07 × 0.60	26.5	41 63 307	**283.50**
1c	Version without ladder	3	2.07 × 0.60	15.3	12 05 207	**182.20**
	– with system fixture	3	2.57 × 0.60	18.4	12 05 257	**199.95**
	– with notch for storey ladders (see p. 32 - 33)	3	3.07 × 0.60	21.5	12 05 307	**231.50**
1d	Version with tube fixture, without ladder	3	1.57 × 0.60	16.2	41 63 158	**206.10**
	– with fixture for tube support & integrated deck retainer	3	2.07 × 0.60	18.2	41 63 208	**221.40**
	– shifted hatch-type access with step tread	3	2.57 × 0.60	21.4	41 63 258	**239.30**
	– with notch for storey ladders (see p. 32 - 33)	3	3.07 × 0.60	24.5	41 63 308	**267.70**
02	**Hatch-type access deck WBQ, 0.60 m** aluminium, chequer plate surface (WBQ) – superior durability, weatherproof – completely made of aluminium for special requirements, e.g. for industrial scaffoldings (fire retardancy)					
2a	Version with ladder	3	2.57 × 0.60	21.8	12 07 257	**292.20**
	– with system fixture	3	3.07 × 0.60	25.0	12 07 307	**326.10**
2b	Version with tube fixture and ladder	3	2.57 × 0.60	23.6	41 67 257	**309.90**
	– shifted hatch-type access with step tread – with fixture for tube support & integrated deck retainer	3	3.07 × 0.60	26.8	41 67 307	**344.45**
2c	Version without ladder	3	2.07 × 0.60	18.0	12 08 207	**203.90**
	– with notch for storey ladders (see p. 32 - 33)	3	2.57 × 0.60	21.0	12 08 257	**238.90**
	(without fig.)	3	3.07 × 0.60	25.5	12 08 307	**271.60**

* A load class overview is available under "Technical Details" on pages 38 - 40.

APPLICATION EXAMPLE HATCH-TYPE ACCESS DECK WBQ

Normally, the installation of access hatches is carried out by alternating one above the other. The bottom-most foot-fall level is to be created by system decks and serves as a set-up area for the first storey ladder.

DETAILED IMAGE: HATCH-TYPE ACCESS DECK WBQ

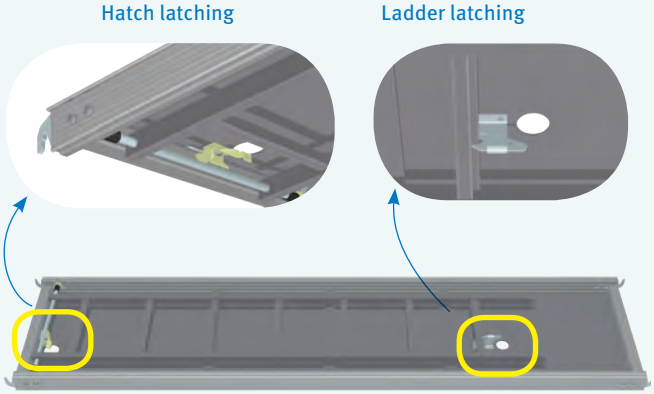

SCAFFOLDING DECKS / HATCH-TYPE ACCESS DECKS

APPLICATION EXAMPLE
04 STEEL PLANK
with locking and spring cotter pins

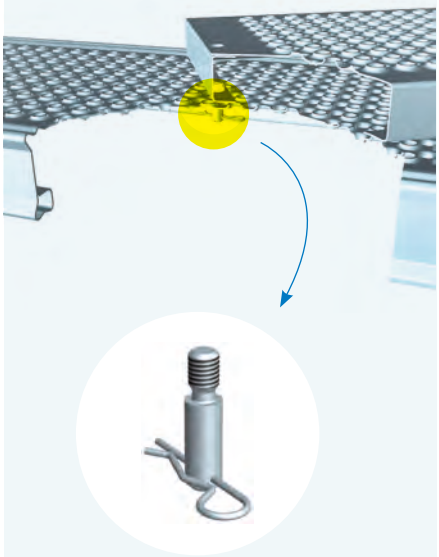

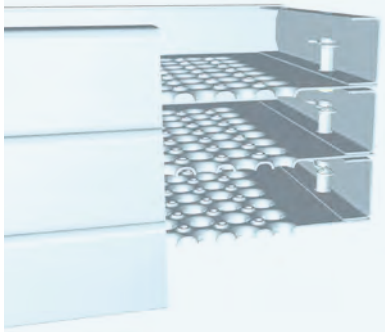

very good stackability of individual steel planks on top of each other

01

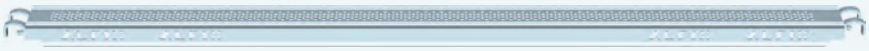

02

03

04

05

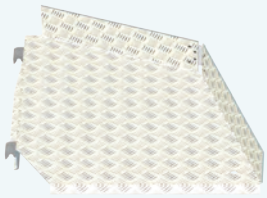

06

APPLICATION EXAMPLE
06 CORNER DECK, ADJUSTABLE

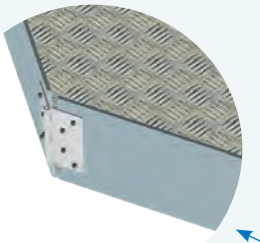

Rear side

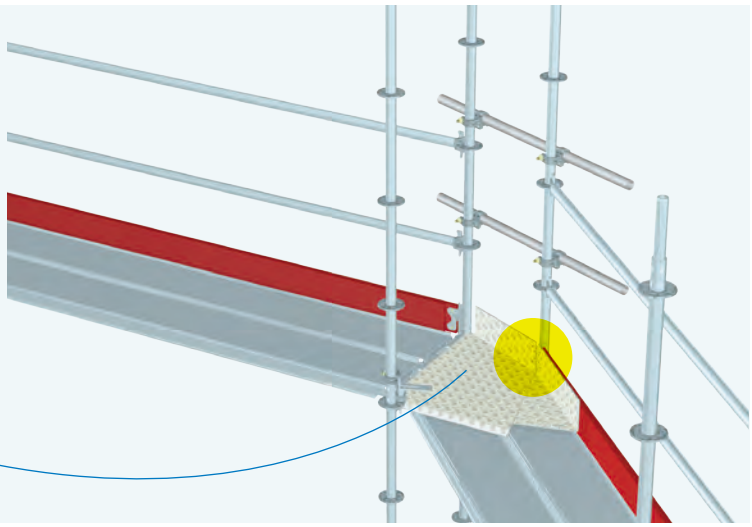

FIG.	DESCRIPTION	LOAD CLASS*	DIMENSIONS L/HXW [M]	WEIGHT approx. [kg]	ARTICLE NO.	PRICE [€]
01	**Intermediate deck, steel** hot-dip galvanised — as equalising deck for deck surfaces of varying widths — predominantly required for surface-oriented birdcage scaffolds	6	1.57 × 0.19	8.6	12 25 157	**40.20**
		6	2.07 × 0.19	11.2	12 25 207	**46.80**
		5	2.57 × 0.19	13.9	12 25 257	**54.80**
		4	3.07 × 0.19	16.5	12 25 307	**63.60**
02	**Intermediate deck with tube fixture, steel** — with fixture for tube support and integrated deck retainer	6	1.57 × 0.19	9.2	40 30 157	**47.80**
		6	2.07 × 0.19	11.8	40 30 207	**53.40**
		5	2.57 × 0.19	14.5	40 30 257	**61.50**
		4	3.07 × 0.19	17.1	40 30 307	**70.20**
03	**Gap cover** ⊕ aluminium chequer plate, for system-compatible decks — for covering constructively induced gaps on the bracket level — to be slipped onto the tube ledger — When using decks with tube fixtures a separate gap cover is required! Available upon request!		1.09 × 0.19	2.0	40 32 109	**29.00**
			1.57 × 0.19	3.0	40 32 157	**34.70**
			2.07 × 0.19	4.0	40 32 207	**42.60**
			2.57 × 0.19	5.1	40 32 257	**46.80**
			3.07 × 0.19	6.1	40 32 307	**55.35**
04	**Steel plank** ⊕ with locking and spring cotter pins — for covering or closing corner areas or other structurally induced openings — positioning solely on steel decks — An overlapping length of 250 mm is required! — thickness: 45 mm	6	1.00 × 0.30	5.5	12 24 100	**40.70**
		6	1.50 × 0.30	8.0	12 24 150	**50.65**
		5	2.00 × 0.30	10.5	12 24 200	**60.35**
		3	2.50 × 0.30	12.8	12 24 250	**68.10**
05	**Spring cotter pin** steel, zinc-plated — spare part for item 4			0.03	73 04 006	**0.50**
06	**Corner deck, adjustable** ⊕ aluminium chequer plate, with integrated toeboard — rigid for angles 45° - 90°		0.60	10.6	40 91 001	**303.30**

* A load class overview is available under "Technical Details" on pages 38 - 40.

APPLICATION EXAMPLE 03 GAP COVER

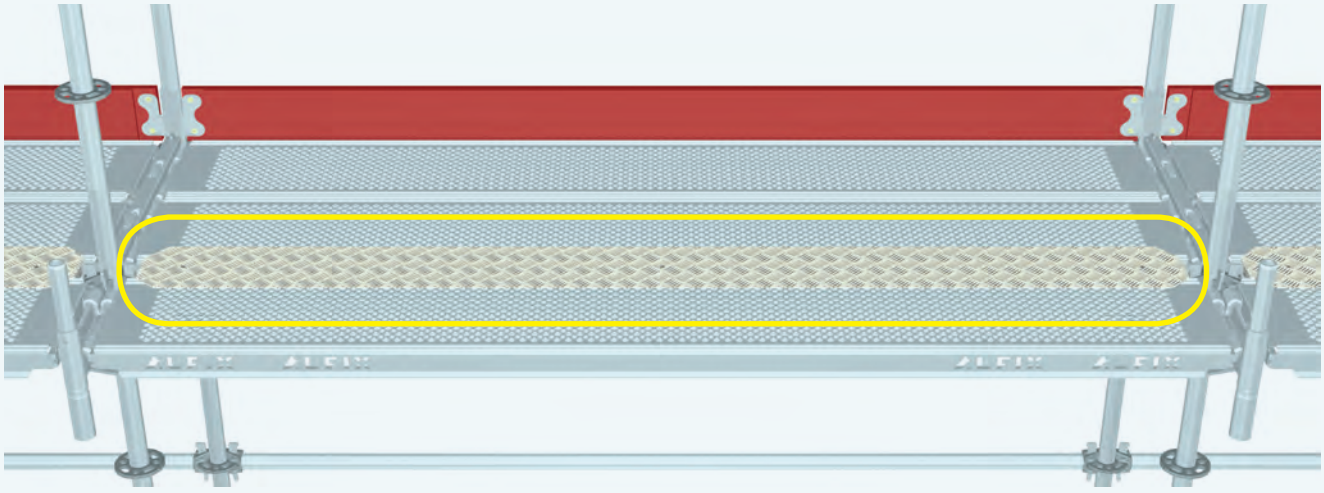

BRACKETS

1c

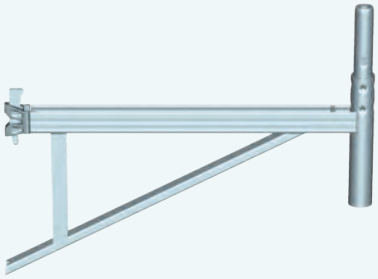

1d

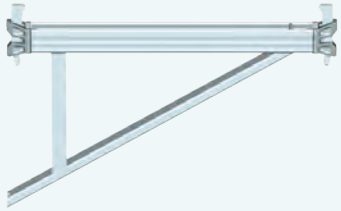

02

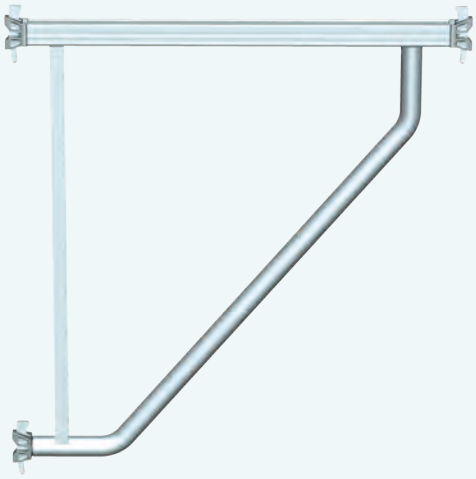

03

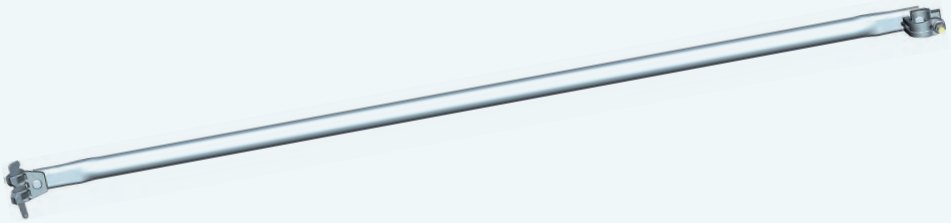

04

APPLICATION EXAMPLE

04 BRACKET BRACE

for creating projections as an alternative to brackets

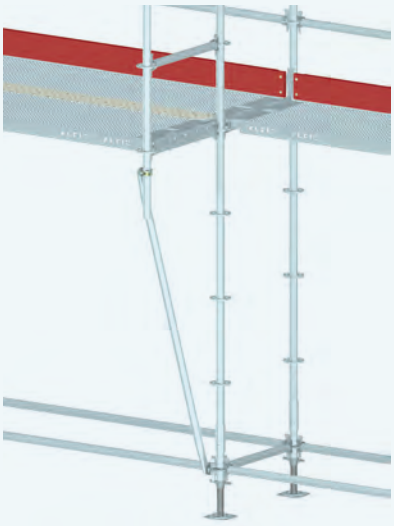

5a

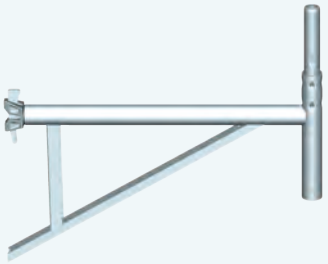

5b

6a

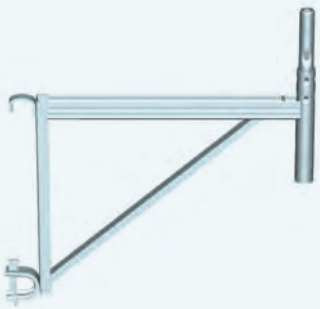

6b

FIG.	DESCRIPTION		DIMENSIONS L/HXW [M]	WEIGHT approx. [kg]	ARTICLE NO.	PRICE [€]
01	**Bracket** steel, hot-dip galvanised — for broadening / extending the scaffold inwards and outwards — with U-profile for system-compatible decks — see page 8 - 9 for respective deck retainers	1a	0.28 (without fig.)	3.0	40 10 011	**31.40**
		1b	0.36 (without fig.)	3.9	40 10 000	**29.00**
		1c	0.39	3.9	40 10 008	**29.00**
		1d	0.73	6.4	40 10 006	**34.20**
02	**Bracket with 2 wedge heads** steel, hot-dip galvanised		0.73	5.5	40 10 014	**38.10**
03	**Bracket** steel, hot-dip galvanised — for broadening / extending the scaffold inwards and outwards — with U-profile for system-compatible decks — see page 8 - 9 for respective deck retainers		1.09	12.0	40 10 012	**71.80**
04	**Bracket brace** ⊕ steel, hot-dip galvanised — for supporting brackets — for single-edge installation on the perforated disc		2.05	7.5	40 10 205	**44.60**
05	**Bracket with tube fixture** steel, hot-dip galvanised — for bracket broadening when decks with tube fixture are used	5a	0.39	3.8	40 10 009	**30.00**
		5b	0.73	5.8	40 10 013	**35.90**
06	**Bracket with tube ledger fixture** ⊕ steel, hot-dip galvanised — for extending building recesses on deck level or at intermediate heights	6a	0.36	6.0	40 10 030	**47.80**
		6b	0.73	7.5	40 10 035	**50.40**

APPLICATION EXAMPLE

6a BRACKET WITH TUBE LEDGER FIXTURE

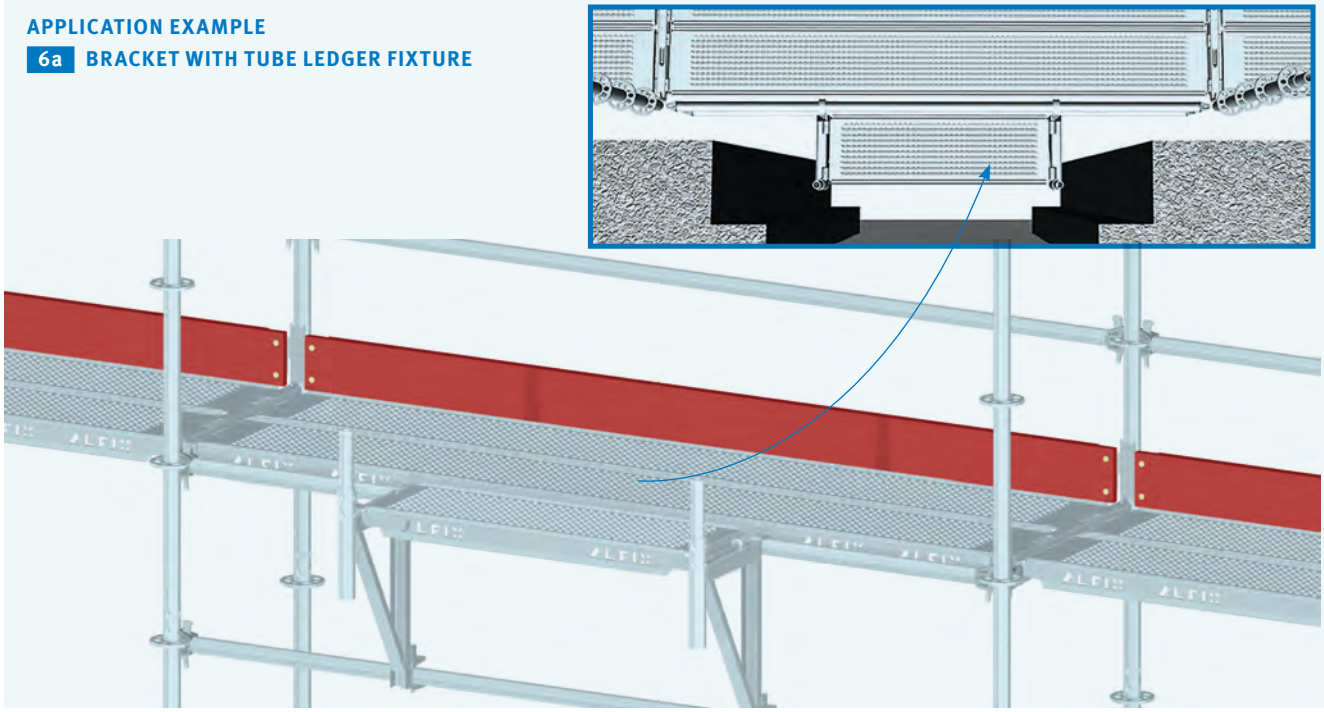

LATTICE GIRDERS

APPLICATION EXAMPLE
03 SPIGOT FITTING
for U-bridging ledger when erecting pedestrian underpasses in varying widths

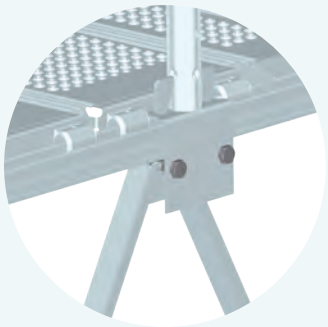

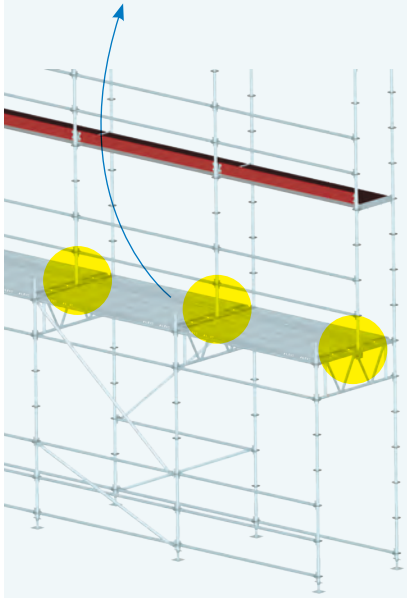

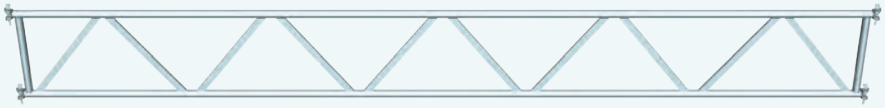

1a

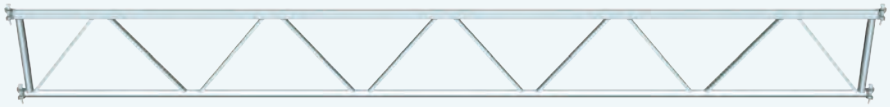

1b

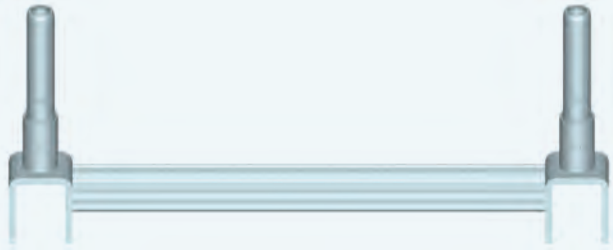

02

03

4a

4b

APPLICATION EXAMPLE
01 LATTICE GIRDER and
02 LATTICE GIRDER CROSS BRACE
Installation of decks is carried out using the movable lattice girder cross brace. Thus, a fail-safe built into the decks is possible, since they can be positioned on lattice girders from the part of the scaffold already erected.

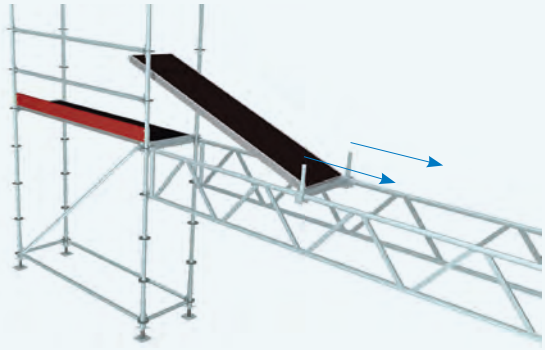

APPLICATION EXAMPLE
05 GUARDRAIL HOLDER WITH TUBE FIXTURE

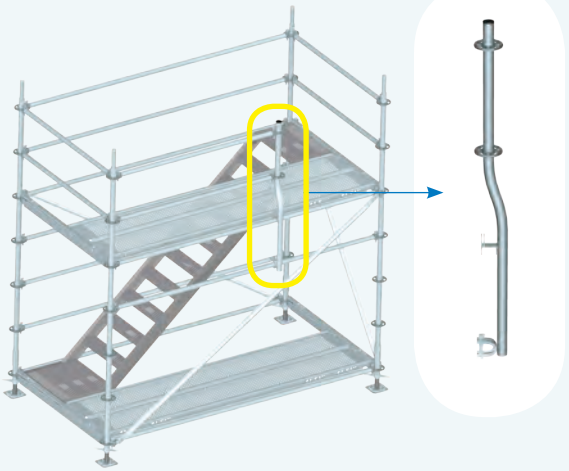

FIG.	DESCRIPTION		DIMENSIONS L/HXW [M]	WEIGHT approx. [kg]	ARTICLE NO.	PRICE [€]
01	**Lattice girder*** ⊕ steel, hot-dip galvanised – available in all system lengths from 1.57 m to 7.71 m – suitable for bridging a distance or for surface scaffoldings – for direct connection to the perforated disc by means of the wedge head (with 4 wedge heads) – lattice girder with welded-on spigot fitting available upon request – see page 36 - 37 for respective fastening bolts					
	1a Lattice girder – for decks with tube fixture – top and bottom boom, steel tube 48.3 mm		5.14	50.0	40 70 515	**270.00**
			6.21	62.5	40 70 622	**310.00**
			7.71	77.1	40 70 772	**460.00**
	1b U-lattice girder – top boom for fixing system-compatible decks – bottom boom steel tube 48.3 mm		3.07	31.2	40 71 307	**179.10**
			4.14	40.5	40 71 414	**219.90**
			5.14	50.9	40 71 514	**265.30**
			6.14	61.1	40 71 614	**299.90**
			7.71	75.9	40 71 771	**388.95**
02	**Lattice girder cross brace** ⊕ steel, hot-dip galvanised – suitable for lattice girders / U-lattice girders – for bridging distances within the façade scaffolding Modul – safeguarding against lifting using fastening bolts – see page 8 - 9 for respective deck retainers – flexible alternative to lattice girders with welded-on spigot fitting		0.73	7.1	40 73 073	**47.45**
			1.09	8.2	40 73 109	**63.15**
03	**Spigot fitting for U-bridging ledger and tube support** incl. hinged pin ⊕ steel, hot-dip galvanised – to be attached on U-profiles or tubes – safeguarding against lifting using fastening bolts		0.4	2.1	41 51 002	**35.90**
04	**Spigot fitting for lattice girder** steel, hot-dip galvanised – suitable on tube ledgers or lattice girders with top boom for variable vertical upright arrangement	4a with coupler	0.3	1.6	41 51 001	**19.80**
		4b with double bead coupler	0.3	1.5	41 51 007	**22.25**
05	**Guardrail holder with tube fixture** ⊕ steel, hot-dip galvanised – for fastening of tube ledgers as a side protection and simultaneously ensuring a passageway – with welded-on toeboard holder		1.65	8.1	41 36 165	**44.60**

LATTICE GIRDER: DECK PARTITIONING

1.57	4 × 0.32 m 1 × 0.19 m	4.14	12 × 0.32 m 1 × 0.19 m
2.07	6 × 0.32 m	5.14	15 × 0.32 m 1 × 0.19 m
2.57	7 × 0.32 m 1 × 0.19 m	6.14	18 × 0.32 m 1 × 0.19 m
3.07	9 × 0.32 m	7.71	23 × 0.32 m 1 × 0.19 m

* Installation of lattice girders according to approval Z-8.22-906, deviating therefrom, applications with lattice girders are to be proven through object-related calculations.

STAIRWAYS / LADDERS / GUARDRAILS

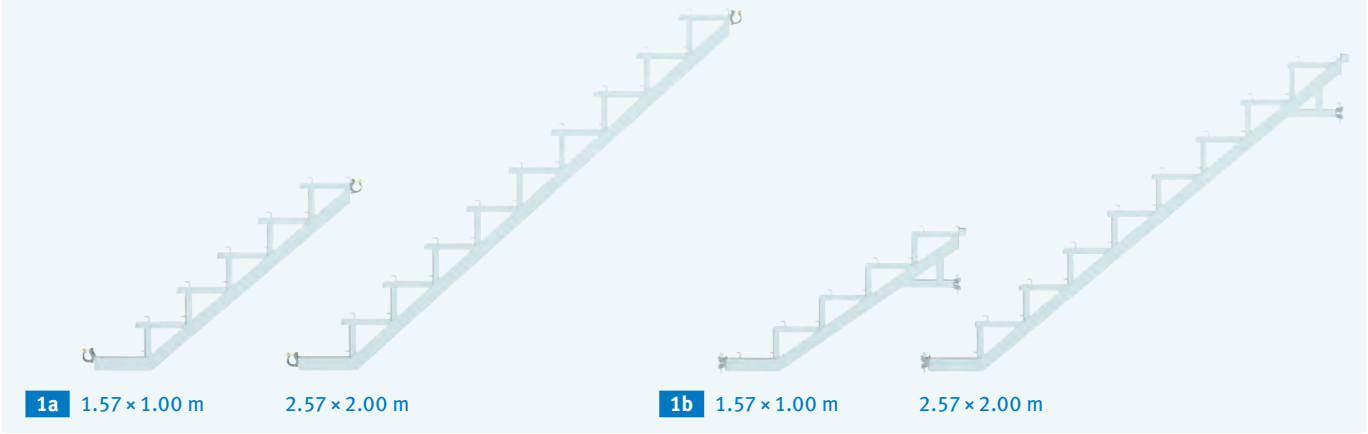

1a 1.57 × 1.00 m 2.57 × 2.00 m **1b** 1.57 × 1.00 m 2.57 × 2.00 m

02

03

04

APPLICATION EXAMPLE

04 Gap ledger
05 Security door

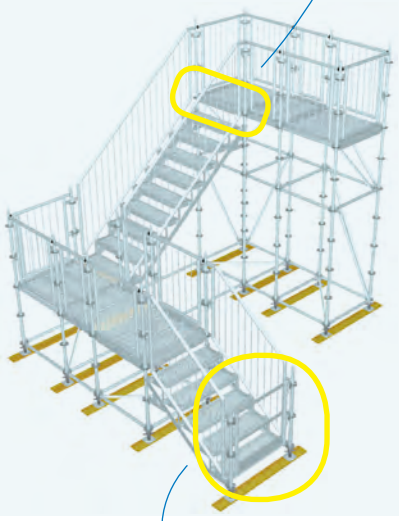

05

APPLICATION EXAMPLE ESCAPE STAIRWAY TOWER 500 kg

— 16-upright stairway tower with stair stringers for fixing system decks (e.g. steel decks)
— varying stair width, depending on particular application
— 9 steps, rise 22 cm / 9 decks per stairway
— load capacity 5.0 kN/m²

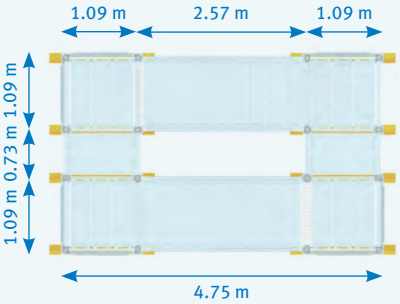

Please refer to our comprehensive stairway and stairway tower programme in the ALFIX MODUL MULTI catalogue and the stairway tower brochure.

FIG.	DESCRIPTION		DIMENSIONS L/HXW [M]	WEIGHT approx. [kg]	ARTICLE NO.	PRICE [€]
01	**Stair stringer** steel, hot-dip galvanised, with fixture for system decks					
	1a with halfcoupler	left	1.57 × 1.00	17.1	41 07 054L	**220.65**
	— max. load 200 kg/m² (load class 3)	right	1.57 × 1.00	17.1	41 07 054R	**220.65**
		left	2.57 × 1.50	29.6	41 07 058L	**250.60**
		right	2.57 × 1.50	29.6	41 07 058R	**250.60**
		left	2.57 × 2.00	28.1	41 07 060L	**281.90**
		right	2.57 × 2.00	28.1	41 07 060R	**281.90**
	1b with wedge heads	left	1.57 × 1.00	16.1	41 07 053L	**224.10**
	— max. load 500 kg/m² (load class 5)	right	1.57 × 1.00	16.1	41 07 053R	**224.10**
		left	2.57 × 1.50	29.3	41 07 059L	**337.90**
		right	2.57 × 1.50	29.3	41 07 059R	**337.90**
		left	2.57 × 2.00	27.3	41 07 061L	**286.30**
		right	2.57 × 2.00	27.3	41 07 061R	**286.30**
02	**Stair guardrail, childproof** steel, hot-dip galvanised		1.57 × 1.00	26.2	41 36 102	**266.60**
			1.57 × 1.50	36.0	41 36 103	**306.35**
	— suitable for installation in a stairway tower up to 500 kg/m², with vertical bars		2.57 × 1.50	42.5	41 36 163	**315.10**
	— further system dimensions available upon request		2.57 × 2.00	42.8	41 36 202	**324.60**
	— suitable for escape stairway towers or similar applications in public areas					
03	**Guardrail, childproof** steel, hot-dip galvanised		0.73 × 1.10	14.3	41 40 073	**115.80**
			1.09 × 1.10	18.5	41 40 109	**156.00**
	— suitable for stairway towers 500 /750 kg/m² or similar applications		1.57 × 1.10	24.3	41 40 157	**186.90**
	— with vertical bars		2.07 × 1.10	29.8	41 40 207	**212.30**
			2.57 × 1.10	35.9	41 40 257	**242.80**
			3.07 × 1.10	41.4	41 40 307	**277.30**
04	**Gap ledger** ⊕ steel, hot-dip galvanised		0.73 × 0.16	5.5	40 20 077	**61.20**
			1.09 × 0.16	6.8	40 20 113	**68.70**
	— to be used when using the stair stringer of 500 kg/m² at the upper transition platform		1.57 × 0.16	9.3	40 20 161	**79.30**
	— to be used when using the stair stringer of 750 kg/m² at the upper and lower transitions to the platform		2.07 × 0.16	10.5	40 20 211	**97.60**
			2.57 × 0.16	12.3	40 20 261	**118.00**
			3.07 × 0.16	14.1	40 20 311	**130.45**
05	**Security door** ⊕ steel, hot-dip galvanised		0.73	11.8	40 77 073	**111.00**
			1.09	13.8	40 77 109	**115.00**
	— with integrated locking mechanism (self-locking)					
	— for securing accesses, e.g. in stairway towers					

STAIRWAYS / LADDERS / GUARDRAILS

APPLICATION EXAMPLE
ESCAPE STAIRWAY TOWER
500 kg / 750 kg

— 16-upright stairway tower with stair stringers for fixing system decks (e.g. steel decks)
— varying stair width, up to 1.57 m (statically induced)
— 9 steps, rise 17 cm / 8 decks per stairway
— load capacity 7.5 kN/m²

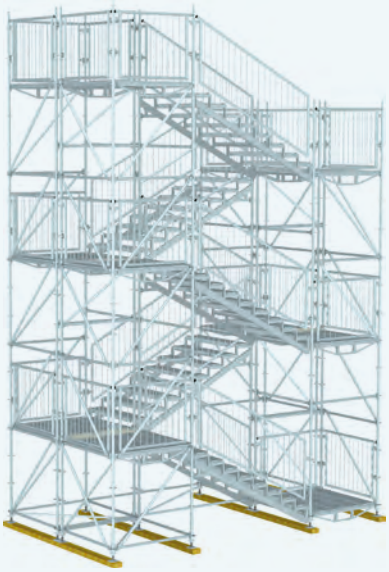

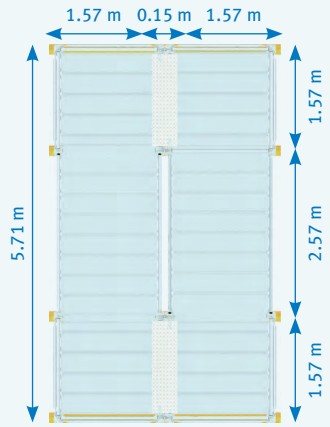

05

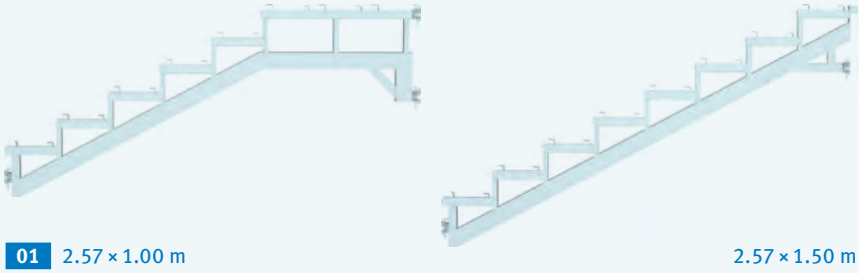

01 2.57 × 1.00 m 2.57 × 1.50 m

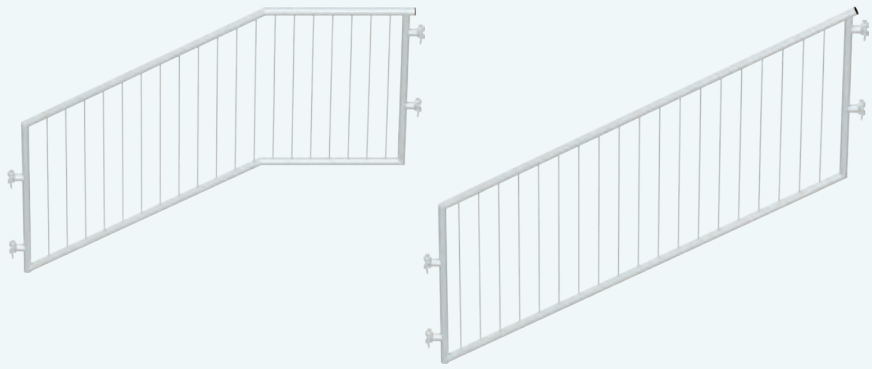

02 2.57 × 1.00 m 2.57 × 1.50 m

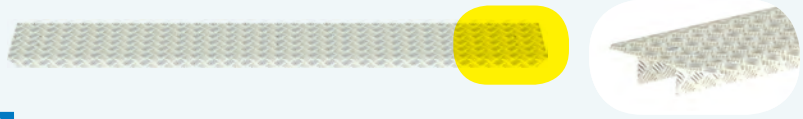

03

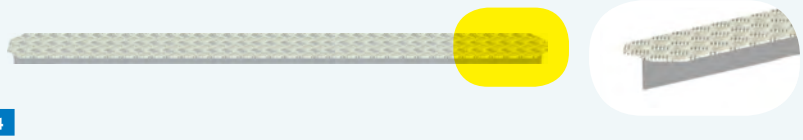

04

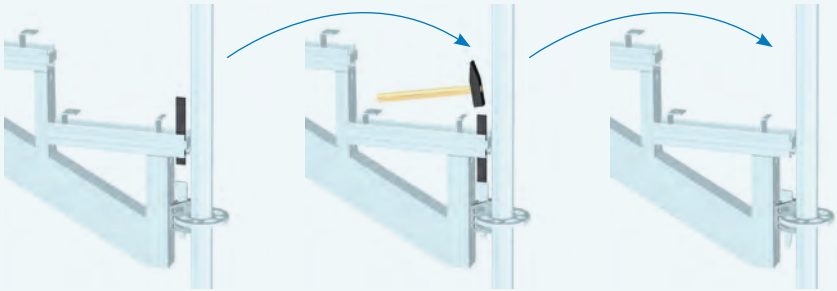

INSTALLATION INSTRUCTION FOR 01 STAIR STRINGER 750 kg/m²
It is recommended to use a suitable flat steel for driving the wedge into the Modul connector through the opening (10 x 35 mm) provided in the stair stringer. Flat steels are available upon request.

FIG.	DESCRIPTION	DIMENSIONS L/HXW [M]	WEIGHT approx. [kg]	ARTICLE NO.	PRICE [€]
01	**Stair stringer** ⊕ steel, hot-dip galvanised — with wedge heads — safe load max. 750 kg/m² — with U-fixture for system-compatible decks — available in installation height 1.00 m and 1.50 m for bay length 2.57 m	1.57 × 1.00 (without fig.)	29.4	41 07 066	**237.00**
		2.57 × 1.00	45.4	41 07 063	**300.10**
		2.57 × 1.50	44.4	41 07 065	**331.40**
02	**Stair guardrail, childproof** steel, hot-dip galvanised — suitable for installation in a stairway tower up to 750 kg/m² — with vertical bars — further system dimensions available upon request — suitable for escape stairway towers or similar applications in public areas	1.57 × 1.00 (without fig.)	28.2	41 36 167	**262.30**
		2.57 × 1.00	40.1	41 36 162	**262.30**
		2.57 × 1.50	41.6	41 36 182	**315.10**
03	**Gap cover for double upright** ⊕ aluminium chequer plate — as an alternative to a deck retainer — for covering gaps between deck levels — safeguard against lifting with clamping coupler (universal design)	1.09 × 0.40	5.6	40 33 109	**64.30**
		1.57 × 0.40	8.5	40 33 157	**53.65**
		2.07 × 0.40	11.5	40 33 207	**70.75**
04	**Gap cover, T-profile** ⊕ aluminium chequer plate — as an alternative to a deck retainer — for covering gaps between deck levels — safeguard against lifting with clamping coupler (universal design) — for covering the mounting claws of the decks and/or the U-profile at continuous platforms	1.09 × 0.19	2.3	40 34 109	**37.80**
		1.57 × 0.19	3.5	40 34 157	**45.85**
		2.07 × 0.19	4.7	40 34 207	**53.85**
05	**Clamping coupler, universal design** ⊕ steel, hot-dip galvanised	0.20	1.1	13 17 019	**19.90**

APPLICATION EXAMPLE: STAIRWAY TOWER

with starting height 1 m (ground adjustment through system-compatible decks and starter transoms)

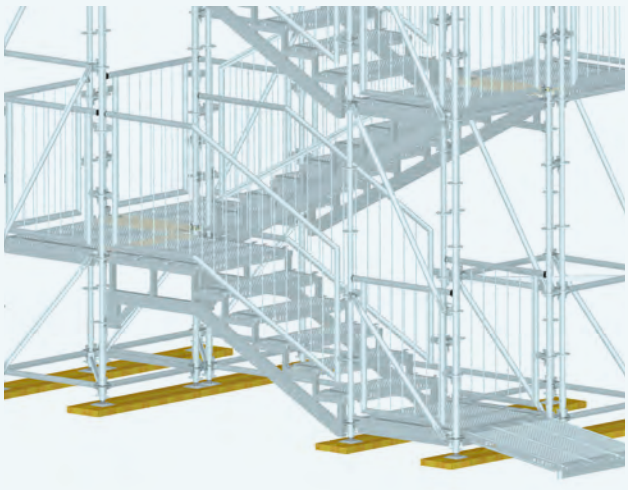

APPLICATION EXAMPLE

03 GAP COVER FOR DOUBLE UPRIGHT
05 CLAMPING COUPLER (UNIVERSAL DESIGN) AS A SAFEGUARD AGAINST LIFTING
a GAP COVER, SEE P. 22 - 23

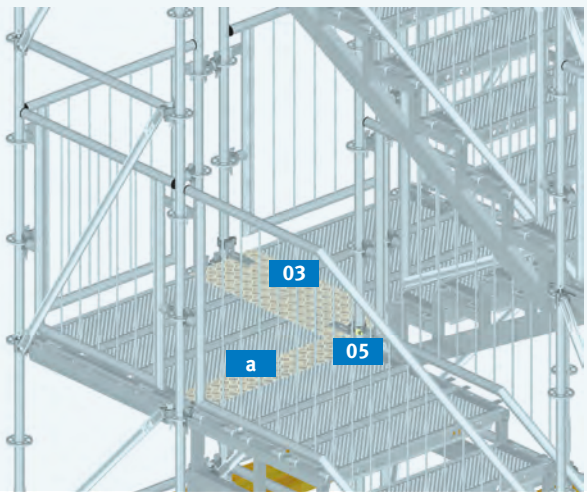

STAIRWAYS / LADDERS / GUARDRAILS

1a 1b 1c

2a

03

APPLICATION EXAMPLE

05 SCAFFOLDING LEANING LADDER

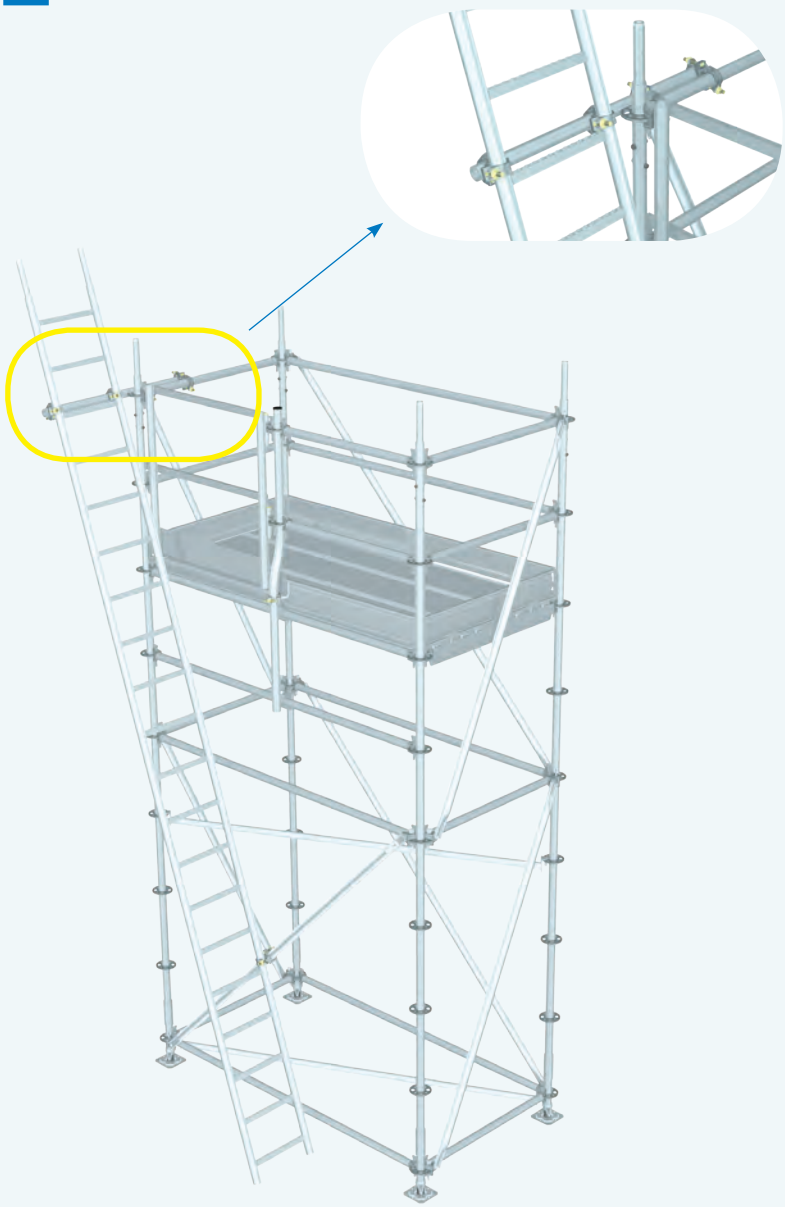

04

05

06

FIG.	DESCRIPTION		DIMENSIONS L/HXW [M]	WEIGHT approx. [kg]	ARTICLE NO.	PRICE [€]
01	**ALBLITZ stairway, aluminium, width: 0.62 m** with system fixture – rise 20 cm, suitable for platform stairway tower applications – safe load max. 200 kg/m² (load class 3)	1a	1.40 × 1.00	15.0	12 98 140	**235.90**
		1b	2.07 × 1.50	23.2	12 98 207	**402.40**
		1c	2.57 × 2.00	26.0	12 98 257	**363.10**
		1d (without fig.)	3.07 × 2.00	32.0	12 98 307	**442.70**
02	**ALBLITZ stairway, aluminium, width: 0.94 m** with system fixture – see item 01	2a	2.57 × 2.00	48.5	12 98 259	**571.40**
		2b (without fig.)	3.07 × 2.00	59.1	12 98 309	**690.40**
03	**Storey ladder, aluminium** for storey height 2.00 m		2.00 × 0.40	3.7	11 32 001	**57.80**
04	**Storey ladder, steel** hot-dip galvanised, for storey height 2.00 m		2.00 × 0.40	8.1	11 42 000	**49.50**
05	**Scaffolding leaning ladder** ⊕ steel tube ø 48.3 x 3.25 mm, hot-dip galvanised – with spigot fitting to extend the scaffolding leaning ladders with one another – securing through hinged pins or locking clips		2.00	20.9	11 40 200	**85.60**
			3.00	30.3	11 40 300	**118.20**
06	**Segmented storey ladder attachment** ⊕ steel, hot-dip galvanised – can be used as a ladder in conjunction with vertical uprights		0.73 × 0.50	3.3	40 11 001	**66.45**

APPLICATION EXAMPLE
06 SEGMENTED STOREY LADDER ATTACHMENT

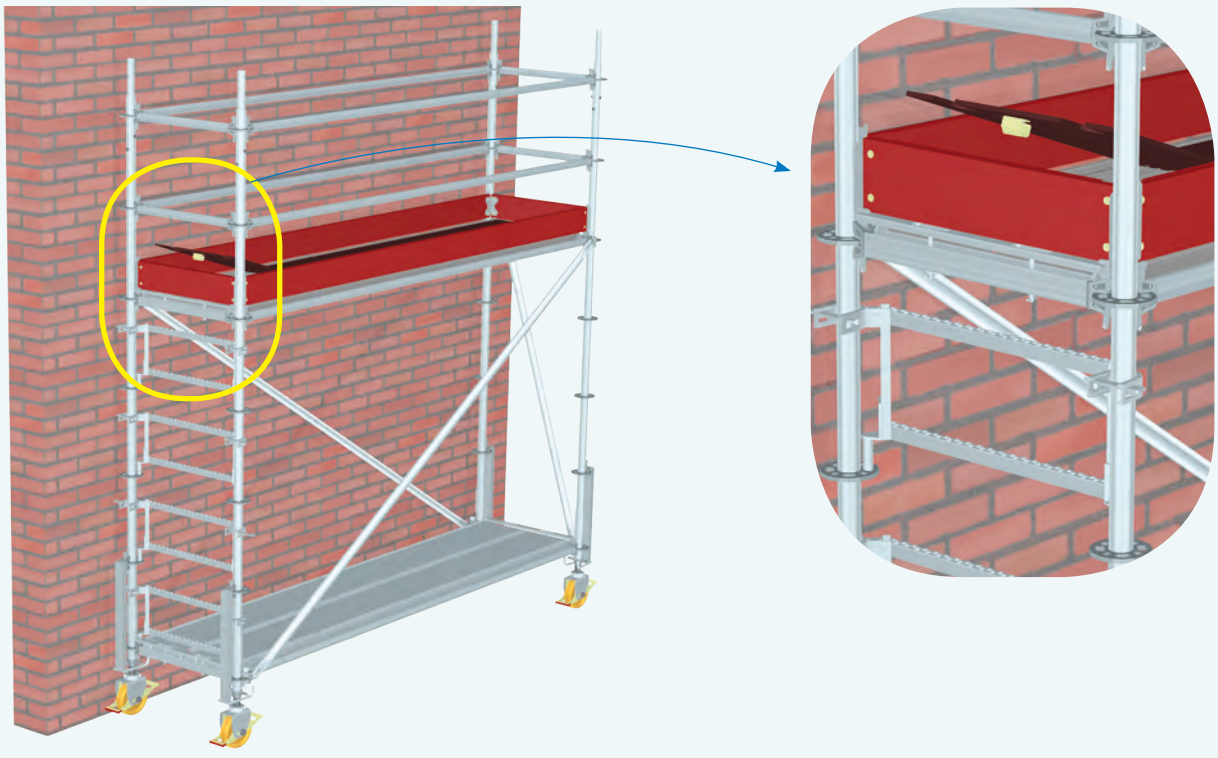

STAIRWAYS / LADDERS / GUARDRAILS

APPLICATION EXAMPLE

04 INNER GUARDRAIL FOR ALUMINIUM STAIRS

05 ALBLITZ PLATFORM GUARDRAIL

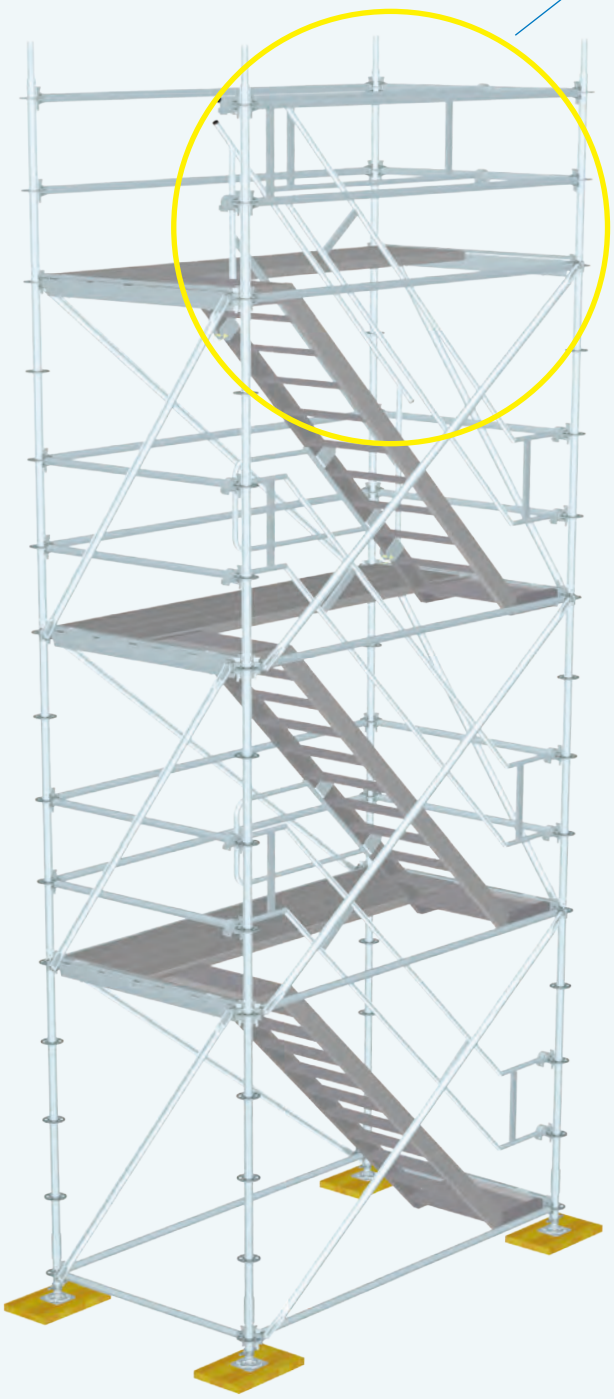

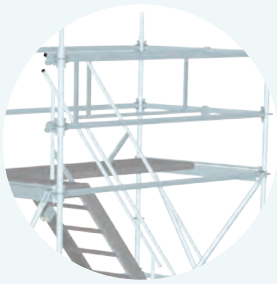

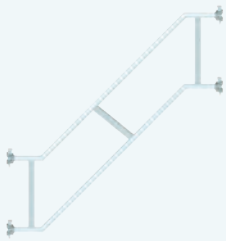

1a

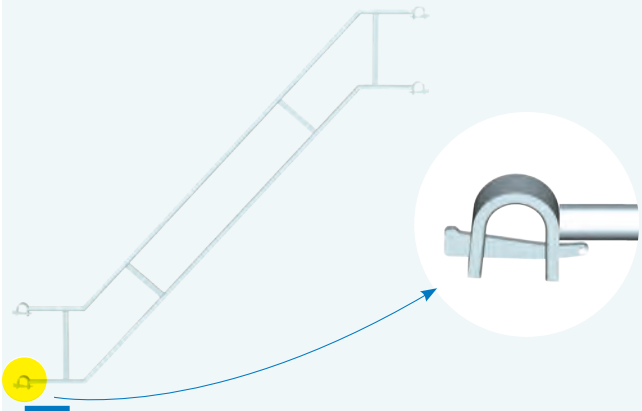

2a

03

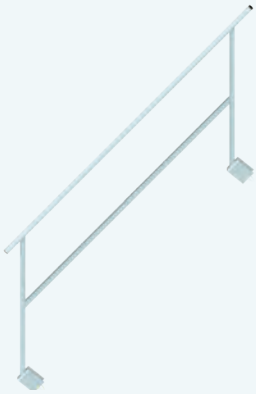

04

05

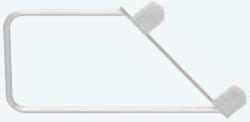

06

FIG.	DESCRIPTION		DIMENSIONS L/HXW [M]	WEIGHT approx. [kg]	ARTICLE NO.	PRICE [€]
01	**ALBLITZ stair guardrail** steel, hot-dip galvanised — with wedge head connections	1a	1.40 × 1.00	11.7	41 36 208	**97.70**
		1b	2.07 × 1.50 (without fig.)	14.8	41 36 207	**105.20**
02	**ALBLITZ stair guardrail** ⊕ steel, hot-dip galvanised — with double bead coupler for tubes 48.3 mm	2a	2.57 × 2.00	18.0	41 36 203	**104.00**
		2b	3.07 × 2.00	19.9	41 36 206	**114.80**
03	**Guardrail fastener** ⊕ steel, hot-dip galvanised			0.8	41 36 300	**13.40**
04	**Inner guardrail for aluminium stairs, height: 2.00 m** ⊕ steel, hot-dip galvanised		2.00 × 1.00	13.3	11 31 000	**101.10**
05	**ALBLITZ platform guardrail** ⊕ steel, hot-dip galvanised		2.57	9.6	41 29 257	**60.75**
			3.07	10.4	41 29 307	**80.20**
06	**Stringer fall protection** ⊕ steel, hot-dip galvanised — incl. hinged pin 12 x 70 mm with snap-in locking mechanism — for lateral fall protection of circumferential bay when using aluminium stairs		1.00 × 0.50	8.8	11 31 001	**53.40**

APPLICATION EXAMPLE

02 ALBLITZ STAIR GUARDRAIL
03 GUARDRAIL FASTENER
06 STRINGER FALL PROTECTION

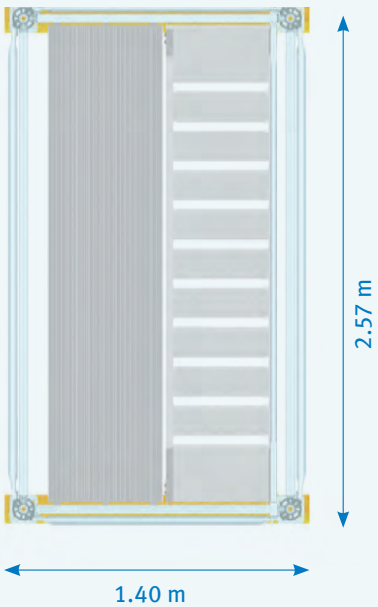

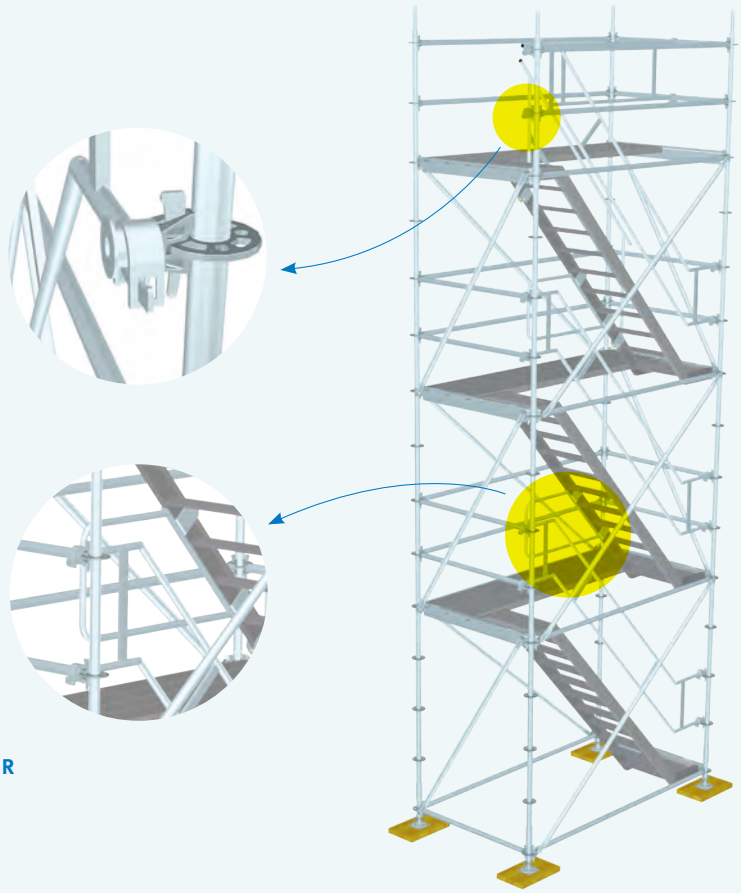

APPLICATION EXAMPLE: PLATFORM STAIRWAY TOWER

— add-on or integrated access ladder for safe climbing
— safe load max. 2.0 kN/m²

ACCESSORIES

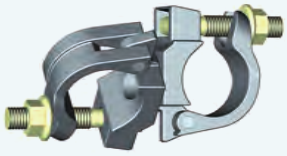

01

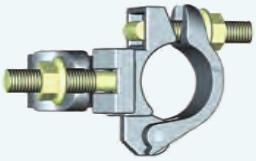

02

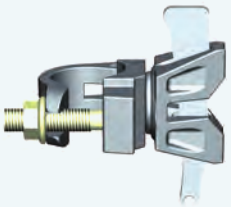

3a

4a

05

3b

APPLICATION EXAMPLE
04 DISTANCE COUPLER

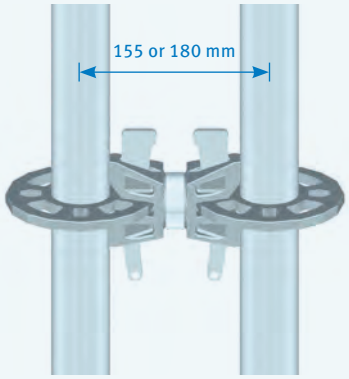

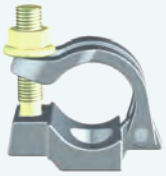

06

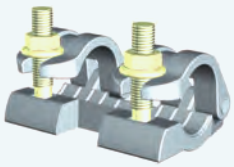

07

08

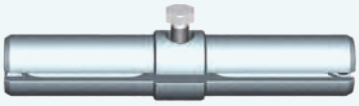

09

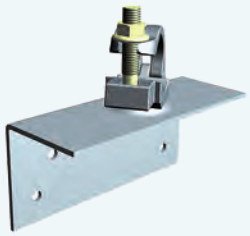

10

11

12

13

14

15

16

FIG.	DESCRIPTION			DIMENSIONS ø / ø [mm]	WEIGHT approx. [kg]	ARTICLE NO.	PRICE [€]
01	**Swivel coupler***		wrench size 19	48 / 48	1.0	13 03 019	**6.30**
02	**Standard coupler***		wrench size 19	48 / 48	1.0	13 01 019	**5.80**
03	**Wedge head coupler***		3a fixed		1.0	41 50 000	**17.70**
			3b turnable		1.0	41 50 001	**19.80**
04	**Distance coupler, fixed*** ⊕		4a (without fig.)	0.15	1.1	41 50 003	**17.80**
			4b	0.18	1.2	41 50 002	**17.80**
05	**Claw coupler***	clear width 35 mm	wrench size 19	48 / –	0.9	13 10 019	**13.70**
06	**Halfcoupler***		wrench size 19	48 / –	0.6	13 02 019	**8.00**
07	**Tension coupler***		wrench size 19	48 / 48	1.4	13 07 019	**9.00**
08	**Spigot fitting for tension coupler**		wrench size 19		1.0	13 08 000	**5.00**
09	**Spigot fitting universal 0.24 m, clampable** – consisting of 2 half-shells and a screw, spread through the screw – for connecting tubes subject to impact stress				1.7	13 08 001	**10.45**
10	**Squared timber coupler*** HxWxD of metal sheet: 100 x 220 x 86 mm, with turnable halfcoupler		wrench size 19		1.8	33 81 019	**17.80**

FIG.	DESCRIPTION	DIMENSIONS L/HXW [M]	WEIGHT approx. [kg]	ARTICLE NO.	PRICE [€]
11	**Hexagon bolt** steel, zinc-plated	M 14 × 65	0.1	14 53 000	**0.90**
12	**Hexagon cap nut** steel, zinc-plated	M 14	0.04	73 02 003	**1.15**
13	**Spacing tube** steel tube 48.3 x 3.2 mm, zinc-plated – installation with two standard couplers at both frame tubes – with a bore hole for locking the hinged pin when using the EIFS anchor sleeve, from lengths of 1.00 m	0.40	1.5	13 61 040	**9.20**
		1.00	3.3	13 61 100	**14.40**
		1.30	4.2	13 61 130	**17.00**
		1.50	4.8	13 61 150	**19.60**
14	**Quick-release anchor** steel, hot-dip galvanised	0.60	2.3	13 62 065	**12.40**
15	**Scaffold tube, steel** ø 48.3 x 3.25 mm, hot-dip galvanised	1.00	3.5	13 51 100	**10.20**
		2.00	7.0	13 51 200	**19.30**
		3.00	10.5	13 51 300	**29.00**
		4.00	14.0	13 51 400	**39.10**
		5.00	17.5	13 51 500	**47.10**
		6.00	21.0	13 51 600	**54.80**
16	**Scaffold tube, aluminium** ø 48.3 × 4.00 mm	1.00	1.5	13 40 100	**12.60**
		2.00	3.0	13 40 200	**25.20**
		3.00	4.5	13 40 300	**37.80**
		4.00	6.0	13 40 400	**50.50**
		5.00	7.5	13 40 500	**62.90**
		6.00	9.0	13 40 600	**73.30**

NOTE *for tubes with Ø 48.3 mm, couplers are approved by the respective manufacturer and in accordance with EN 74 standard

TECHNICAL DETAILS

LOAD-BEARING CAPACITY: ALFIX MODUL MULTI SCAFFOLDING CONNECTOR

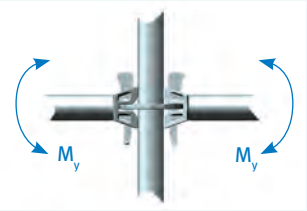

Bending moment
$M_{y,R,d} = \pm$ 104 kNcm

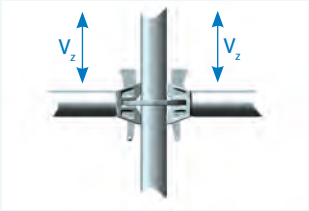

Vertical cross-load
$V_{z,R,d} = \pm 35$ kN

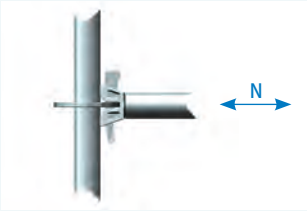

Standard load
$N_{R,d} = \pm 36$ kN

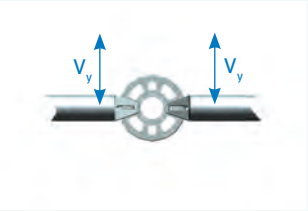

Horizontal cross-load
$V_{y,R,d} = \pm 16$ kN

ALBLITZ MODUL SCAFFOLDING CONNECTOR

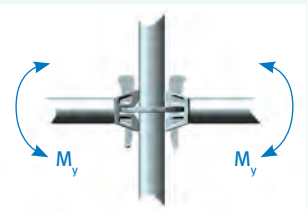

Bending moment
$M_{y,R,d} = \pm$ 101 kNcm

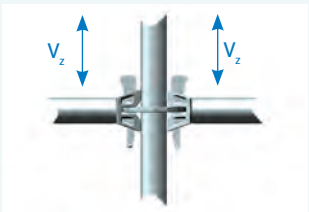

Vertical cross-load
$V_{z,R,d} = \pm 26$ kN

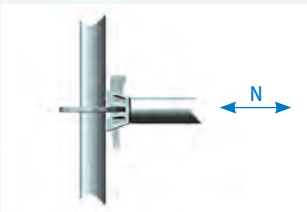

Standard load
$N_{R,d} = \pm 31$ kN

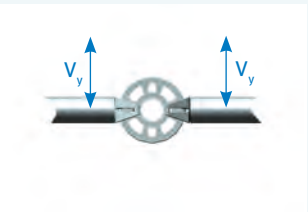

Horizontal cross-load
$V_{y,R,d} = \pm 10$ kN

In the standard version, the scaffold may be used as a working scaffold for load classes ≤ 3 with system width b=0.732 m and bay width l=3.07 m, or for load classes ≤ 4 with system width b=1.09 m and bay width l=2.57 m according to DIN EN 12811-1:2004-03, and as a safety and roof safety scaffold acc. to DIN 4420-1:2004-03.

The upper horizontal level (scaffold layer) must not exceed 24 m, plus spindle (jack) extension length, above ground level. According to the requirements of DIN EN 12811-1:2004-03, Section 6.2.9.2, in the standard version, the scaffolding system is designed for working operations in one scaffolding layer in front of an "open" façade (percentage of openings = 60 percent) and in front of closed façades.

Without any further evidence, the standard version must only be used if the loads acting within the bays do not exceed the respective live loads according to DIN EN 12811-1:2004-03, Table 3.

For the standard version of the ALFIX MODUL MULTI scaffolding system, the following designation according to DIN EN 12810-1:2004-03 shall be used:

Scaffold EN 12810-3D-SW06/307-H2-A-LA

Scaffold EN 12810-4D-SW09/257-H2-A-LA

When erecting and dismantling the scaffold, the provisions of the employer's liability insurance association for construction sites, the accident prevention regulations for construction works (BGV 22, previously VBG 37) and the instructions and requirements of DIN 4420 or EN 12811 must be observed.

In an object-related instruction for assembly and use, and based on a risk and hazard assessment, the employer is entitled to decide the most suitable protection from falling possible, in accordance with the respective industrial safety regulations.

Possible protective actions are technical measures, personal protective equipment (PPE) against falling, and special instructions. As a technical protective measure, ALFIX provides two variants of "advanced guardrails", which are documented separately or by means of the manual provided by the respective manufacturer.

If the result of risk assessment requires the use of PPE, suitable attachment points on scaffold must be used, such as, for example, the idle outer service aperture of connecting disc or the outer vertical upright above the decks (max. 1 m above standing height).

Vertical upright

permissible [1] upright load (compressive load) or tensile load-bearing capacity at screwed-in spigot

						TENSILE LOAD
Buckling length [m]	1.0	1.5	2.0	3.0	4.0	2 × 2 M10 8.8
Permissible load N [kN]	64.9	43.7	28.4	14.0	8.2	42.7

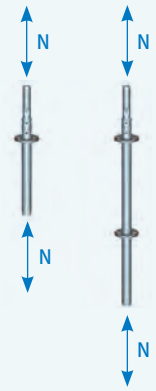

Vertical upright

U-ledger

permissible [1] cross-loads

	LEDGER	LEDGER, reinforced	U-BRIDGING LEDGER			
Length L [m]	0.73	1.09	1.57	2.07	2.57	3.07
Permissible uniformly distributed load q [kN/m]	17.00	17.50	12.50	9.50	6.70	5.00
Permissible single load P [kN/m] in centre	6.00	8.90	11.10	8.20	7.50	6.00

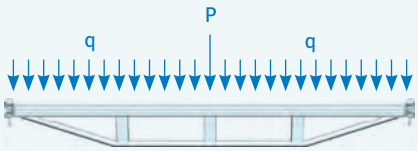

U-ledger – permissible cross-loads

Tube ledger

permissible [1] cross-loads

	LEDGER	LEDGER, reinforced	TUBE BRIDGING LEDGER			
Length L [m]	0.73	1.09	1.57	2.07	2.57	3.07
Permissible uniformly distributed load q [kN/m]	21.80	16.80	16.60	10.40	6.60	4.70
Permissible single load P [kN/m] in centre	7.90	9.10	14.20	8.70	5.60	4.50

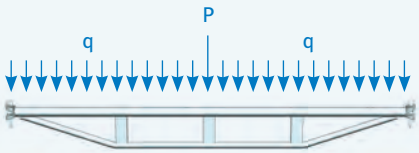

Tube ledger – permissible cross-loads

Tube ledger

permissible [1] standard load (permissible Z=24 kN)

Bay length [m]	0.73	1.09	1.57	2.07	2.57	3.07
Permissible compressive force D [kN]	24.00	24.00	24.00	24.00	18.40	13.40

Tube ledger – permissible standard load

Vertical diagonal brace

permissible [1] standard load (bay height: 2.0 m)

Bay length [m]	0.73	1.09	1.57	2.07	2.57	3.07
Permissible compressive force D [kN]	14.70	14.30	12.30	10.30	8.50	6.90
Permissible tensile force D [kN]	14.70	15.20	15.20	15.20	15.20	15.20

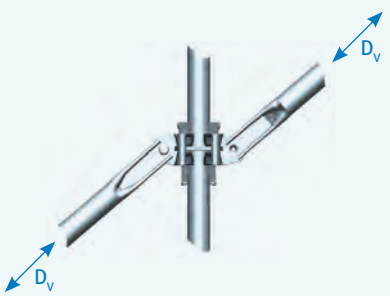

Vertical diagonal brace

1 safe load determined using γM=1.1 and γF=1.5

TECHNICAL DETAILS

Load classes of scaffolding decks

SCAFFOLDING DECKS

DESIGNATION	BAY LENGTH L (m)	USAGE IN SAFETY/ROOF SAFETY SCAFFOLDING	USAGE IN LOAD CLASS	
Steel deck 0.32 m	≤ 2.07	permissible	6	
	2.57	permissible	5	
	3.07	permissible	4	
	4.14	permissible	3	
Wooden deck 0.32 m	≤ 1.57	permissible	6	
	2.07	permissible	5	
	2.57	permissible	4	
	3.07	permissible	3	
Solid aluminium deck 0.32 m	≤ 2.07	permissible	6	
	2.57	permissible	5	
	3.07	permissible	4	
	4.14	–	3	
ALBLITZ lightweight deck 0.60 m	1.57	permissible	4	
	2.07	permissible	4	
	2.57	permissible	4	
	3.07	permissible	3	
Frame platform 0.60 m screen-printed plywood plated surface (SPP)	≤ 3.07	permissible	3	
Hatch-type access with ladder SPP 0.60 m screen-printed plywood plated surface (SPP)	≤ 3.07	permissible	3	
Hatch-type access with ladder WBQ 0.60 m chequer plate surface (WBQ)	2.57	zulässig	3	
	3.07	zulässig	3	
Hatch-type access without ladder SPP 0.60 m screen-printed plywood plated surface (SPP)	≤ 3.07	zulässig	3	

Parameters of horizontal diagonal braces

(extract of approval no. Z-8.22-906)

HORIZONTAL DIAGONAL BRACES

BAY LENGTH (m)	BAY WIDTH (m)	$N_{H,R,D}$ (kN)
2.07	0.73	3.03
2.57	0.73	3.00
3.07	1.09	2.95

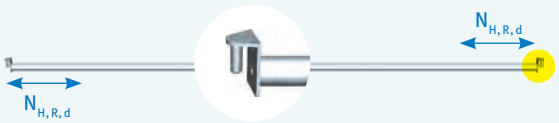

Cross-section values of base jacks

The equivalent cross-section values of spindles to be used for stress analysis and deformation calculations according to DIN 4425 are to be assumed as follows:

BASE JACK

$A = A_s$	=	3.52 cm²
I	=	4.00 cm⁴
W_{el}	=	2.68 cm³
W_{pl}	=	1.25 × 2.68 = 3.35 cm³

EXTRACTS FROM THE DIN EN 12811 STANDARD

Working loads on scaffold layers

SCAFFOLD LAYERS

LOAD CLASS	UNIFORMLY DISTRIBUTED LOAD q_1 in kN/m²	LOAD CONCENTRATED ON A 500 mm x 500 mm AREA, F_1 in kN	LOAD CONCENTRATED ON A 200 mm x 200 mm AREA, F_2 in kN	PARTIAL AREA LOAD q_2 in kN/m²	Partial area factor a_p [1)]
1	0.75	1.50	1.00	–	–
2	1.50	1.50	1.00	–	–
3	2.00	1.50	1.00	–	–
4	3.00	3.00	1.00	5.00	0.4
5	4.50	3.00	1.00	7.50	0.4
6	6.00	3.00	1.00	10.00	0.5

Clearance classes

SCAFFOLD LAYERS

CLASS	CLEARANCE		
	between scaffold layers h_3	between scaffold layers and transoms or scaffold retainers h_{1a} and h_{1b}	Shoulder height h_2
H_1	$h_3 \geq 1.90$ m	$1.75 \text{ m} \leq h_{1a} \leq 1.90$ m $1.75 \text{ m} \leq h_{1b} \leq 1.90$ m	$h_2 \geq 1.60$ m
H_2	$h_2 \geq 1.90$ m	$h_{1a} \geq 1.90$ m $h_{1b} \geq 1.90$ m	$h_2 \geq 1.75$ m

Width classes

SCAFFOLD LAYERS

WIDTH CLASS	w in m
W06	0.6 ≤ w ≤ 0.9
W09	0.9 ≤ w ≤ 1.2
W12	1.2 ≤ w ≤ 1.5
W15	1.5 ≤ w ≤ 1.8
W18	1.8 ≤ w ≤ 2.1
W21	2.1 ≤ w ≤ 2.4
W24	2.4 ≤ w

Clear heights and widths of scaffold layers

b	open passageway clearance, 500 mm is the minimum requirement, and (c - 250 mm)
c	clear spacing between posts
h_{1b}, h_{1b}	clear width between scaffold layers and transoms or scaffold retainers
h_2	clear shoulder height
h_3	clear height between scaffold layers
p	clear width in the head area, 300 mm is the minimum requirement, and (c - 450 mm)
w	width of scaffold layers

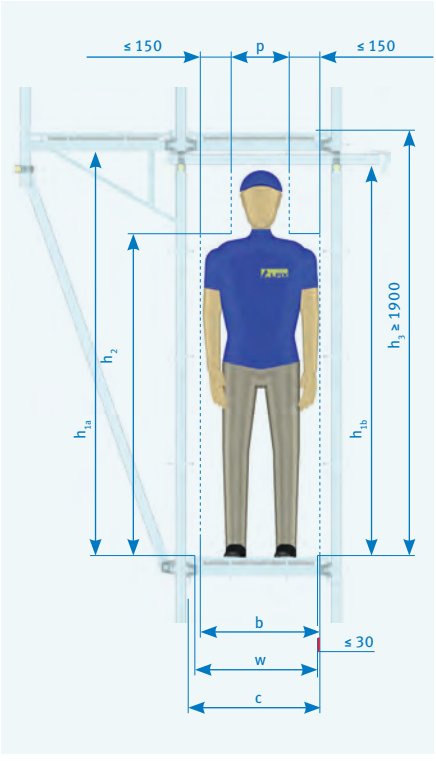

Designation of a scaffolding system according to EN 12810-1

Example: Scaffold EN 12810 - 4D - SW09/257 - H2 - A - LA

Scaffold EN 12810	Frame scaffold (system scaffold) according to DIN EN 12810-1
4	Load class 4 (see Table 3 DIN EN 12811-1)
D	Vertical drop tests on deck surface (D = calculated with drop test, N = without drop test)
SW09/257	Width class (see table 1 DIN EN 12811-1), here: between 0.90 m and 1.20 m/bay length 2.57 m
H2	Headroom class (see Table 2 DIN EN 12811-1)
A	without sheeting (A = without sheeting, B = with sheeting)
LA	with ladder (LA = ladder, ST = stairway, LS = with both)

NOTES

SKETCHES

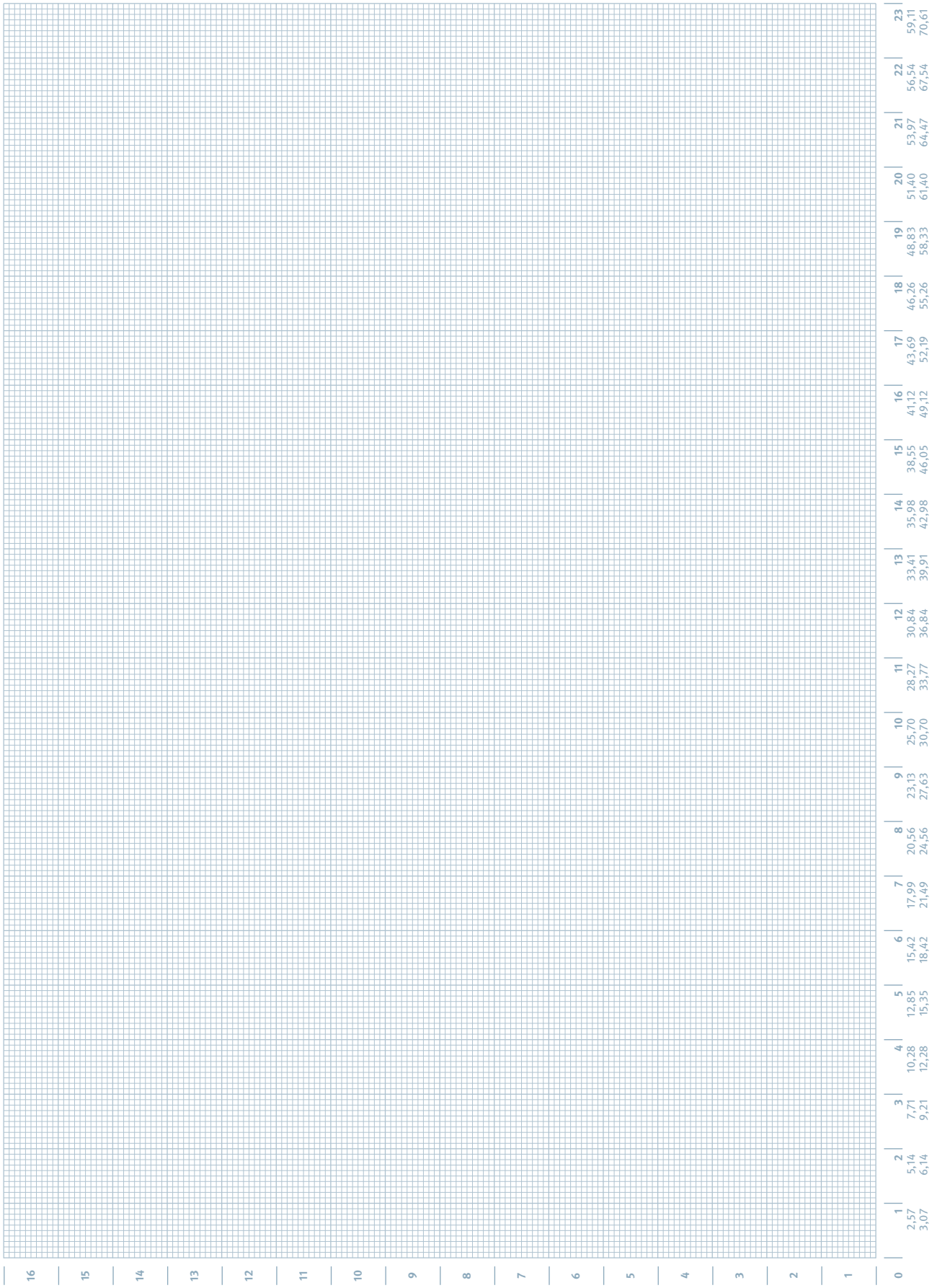
0 1 2 3 4 5 6 7 8 9 10 11 12 13 14 15 16
1 2,57 3,07
2 5,14 6,14
3 7,71 9,21
4 10,28 12,28
5 12,85 15,35
6 15,42 18,42
7 17,99 21,49
8 20,56 24,56
9 23,13 27,63
10 25,70 30,70
11 28,27 33,77
12 30,84 36,84
13 33,41 39,91
14 35,98 42,98
15 38,55 46,05
16 41,12 49,12
17 43,69 52,19
18 46,26 55,26
19 48,83 58,33
20 51,40 61,40
21 53,97 64,47
22 56,54 67,54
23 59,11 70,61

www.alfix-systems.com

ALFIX GmbH
Langhennersdorfer Straße 15
09603 Großschirma, Germany

Phone +49 (0) 37328 / 800-100
Fax +49 (0) 37328 / 800-199
eMail info@alfix-systems.com

SALE OF:
— Work and safety scaffolds
— Mobile scaffold towers
— Weather protection roofs
— Chimney scaffolds
— Accessories

HIRE OF:
— Work and safety scaffolds
— Mobile scaffold towers
— Weather protection roofs

Edition: 04/2017