ALFIX
SECURELY SCAFFOLDED

UNIFIX FAÇADE SCAFFOLDING

Catalogue and Price List

Universal frame scaffolding system.
Whether in steel or aluminium, quality in detail

TABLE OF CONTENTS

UNIFIX FAÇADE SCAFFOLDING SYSTEM	
UNIFIX Façade Scaffolding	p. 02
PRICE LIST - UNIFIX FAÇADE SCAFFOLDING	
Assembly Frames	p. 04
Scaffolding Decks / Hatch-Type Access Decks	p. 10
Stairways / Ladders	p. 14
Side Protection / Rear Guardrails	p. 18
Side Protection / Toeboards	p. 22
Extension Parts	p. 24
Anchoring	p. 30
Brackets	p. 32
Lattice Girders	p. 36
Aluminium Bridging Decks	p. 38
Couplers	p. 40
Façade Scaffolding Accessories	p. 42
Fall Protection Equipment	p. 46
Scaffolding Examples	p. 48
TECHNICAL DETAILS	
Cross-section values of base jacks	p. 50
Load classes of scaffolding decks	p. 50
Extracts from the DIN EN 12811 standard	p. 51

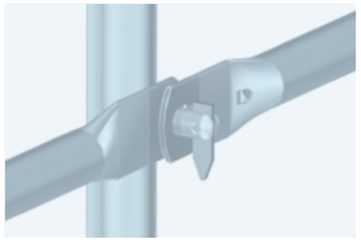

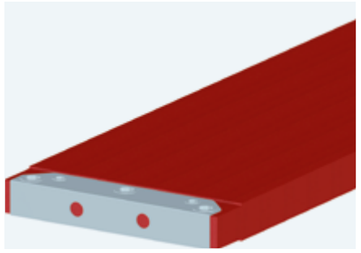

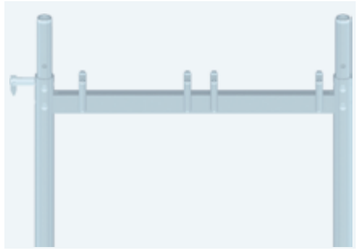

It does not matter if it is made of steel or aluminium, every single detail of the ALFIX façade scaffolding system is thoroughly checked for quality and reliability.
Both, simple handling and short assembly/disassembly times, ensure an effortless and economic use.
Our competent team of technical advisers is available to kindly assist you through, both, consultation and customer support, as you plan your scaffold structure. All your questions can be answered, even the compatibility with third-party products. Get in touch with one of our specialists and stay informed!

The data specified herein is for information only and shall not constitute a commercial offer. For contingent misprints in article numbers, article descriptions as well as prices, no liability is assumed. Subject to alterations. All rights remain with the publisher. Any reproduction, either in whole or in part, requires the prior written permission of the publisher.

All prices shall be understood to be net plus statutory VAT.
With the publishing of the current catalogue, previous editions become invalid.

Catalogue and Price List UNIFIX Façade Scaffolding System

Edition: June 2018

UNIFIX FAÇADE SCAFFOLDING

The UNIFIX façade scaffolding is a scaffold system made of prefabricated components. Available bay lengths are 0.74 m – 1.10 m – 1.50 m – 2.00 m – 2.50 m – 3.00 m and 4.00 m. Standard width of the scaffold is 0.74 m.

The scaffold can be used as a working scaffold for load classes 1 to 3 in accordance with DIN EN 12810 and 12811 (area-related useful load 200 kg/m² in load class 3) as well as for safety and roof safety scaffolding (max. fall height 2.00 m). The proof calculation for the standard design version was carried out for an erected height of 24.00 m, plus the length of the spindle (jack) extension.

If the scaffolding system is used for scaffolds deviating from standard design, the deviations must be available for assessment according to both the Technical Building Regulations and the appropriate technical approval, and must be calculated for each individual case.

Overview of Standard Components

The UNIFIX façade scaffolding system consists of a manageable number of individual parts. The façade scaffold´s basic structure can be erected using only a small number of standard components which are available in various grid spacings. Particular information about the Technical Data can be found on pages 50–51.

01 Base jack
02 Assembly frame
03 Lightweight deck, aluminium
04 End toeboard
05 Double end guardrail
06 Wooden toeboard
07 Rear guardrail
08 Guardrail post
09 End guardrail frame
10 Hatch-type access deck with ladder, aluminium (SPP)
11 Wooden deck
12 Transom member
13 Diagonal brace
14 Rear guardrail used as a horizontal strut
15 Lower diagonal brace fixture

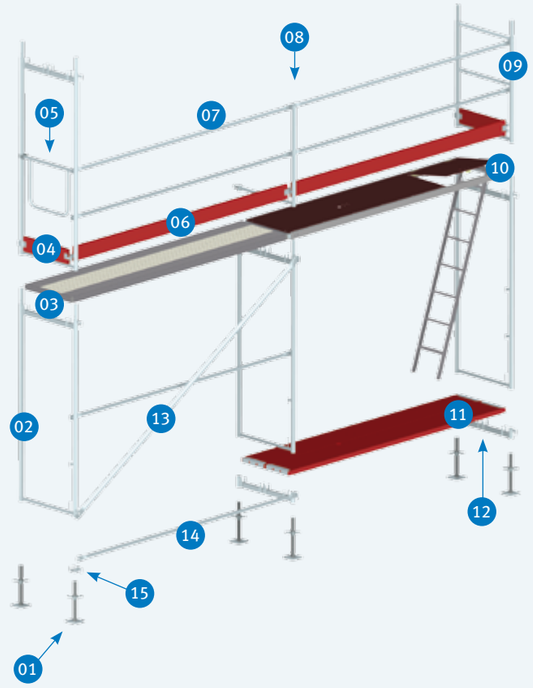

Technical Approval & Instructions for Assembly and Use:

UNIFIX 70 (Z-8.1-847)

INSTRUCTIONS FOR ASSEMBLY AND USE UNIFIX SYSTEM

ASSEMBLY FRAMES

FIG.	DESCRIPTION	DIMENSIONS L/HxW [m]	WEIGHT approx. [kg]	ARTICLE NO.	PRICE [€]
01	**Assembly frame** ⊕ — basic element to erect the façade scaffolding — stackable on top of the other via pressed-in spigot fittings — the lower transom is intended to retain the decking of the underlying storey level				
1a	steel, 0.74 m, with tilting pins on one side steel tube ø 48.3 x 2.7 mm, hot-dip galvanised, with 8 pins for deck suspension	0.50 × 0.74	8.7	20 10 050L	**63.00**
		1.00 × 0.74	11.9	20 10 100L	**67.50**
		1.50 × 0.74	15.1	20 10 150L	**73.20**
		2.00 × 0.74	18.2	20 10 200L	**74.50**
1b	steel, 0.74 m, with tilting pins and toeboard pins on both sides steel tube ø 48.3 x 2.7 mm, hot-dip galvanised, with 8 pins for deck suspension	2.00 × 0.74	18.4	20 10 202L	**77.50**
1c	aluminium, 0.74 m, with tilting pins on one side aluminium tube ø 48.3 x 4.0 mm, with 8 pins for deck suspension	0.50 × 0.74	4.3	20 00 050	**83.00**
		1.00 × 0.74	5.8	20 00 100	**91.00**
		1.50 × 0.74	7.5	20 00 150	**97.50**
		2.00 × 0.74	8.9	20 00 200	**109.00**
1d	steel, 1.10 m, with tilting pins on one side steel tube ø 48.3 x 3.2 mm, hot-dip galvanised	0.50 × 1.10	14.5	20 11 050	**74.50**
		1.00 × 1.10	18.3	20 11 100	**80.50**
		1.50 × 1.10	22.1	20 11 150	**88.00**
		2.00 × 1.10	24.9	20 11 200	**98.00**
1e	steel, 1.10 m, with tilting pins and toeboard pins on both sides steel tube ø 48.3 x 3.2 mm, hot-dip galvanised	2.00 × 1.10	25.0	20 11 201	**103.00**

APPLICATION EXAMPLE
1a ASSEMBLY FRAME

a Diagonal brace fixture

b Tilting pin for guardrail fixture

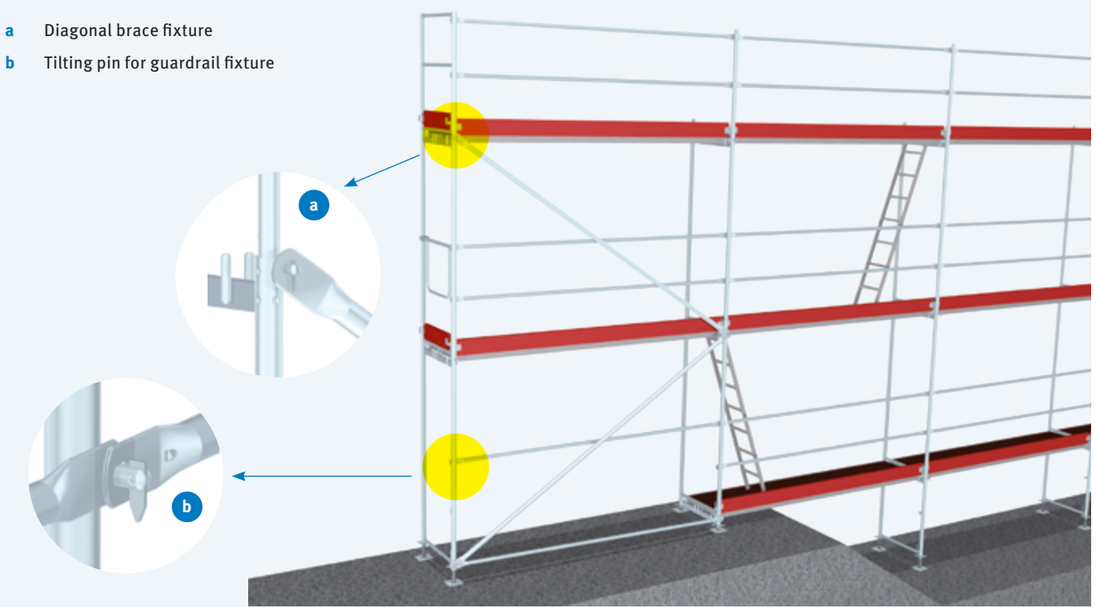

ASSEMBLY FRAMES

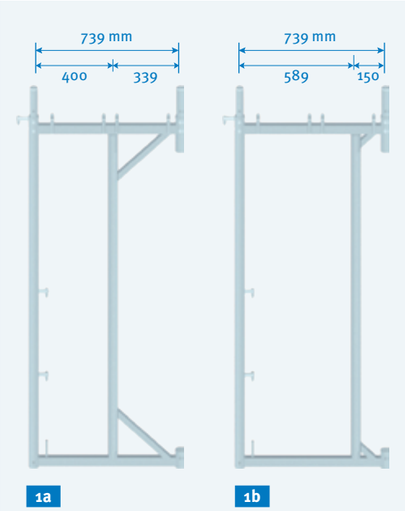

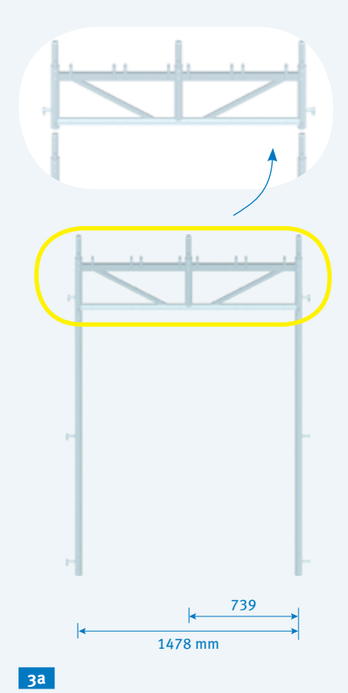

APPLICATION EXAMPLE
02 ROOF SAFETY FRAME

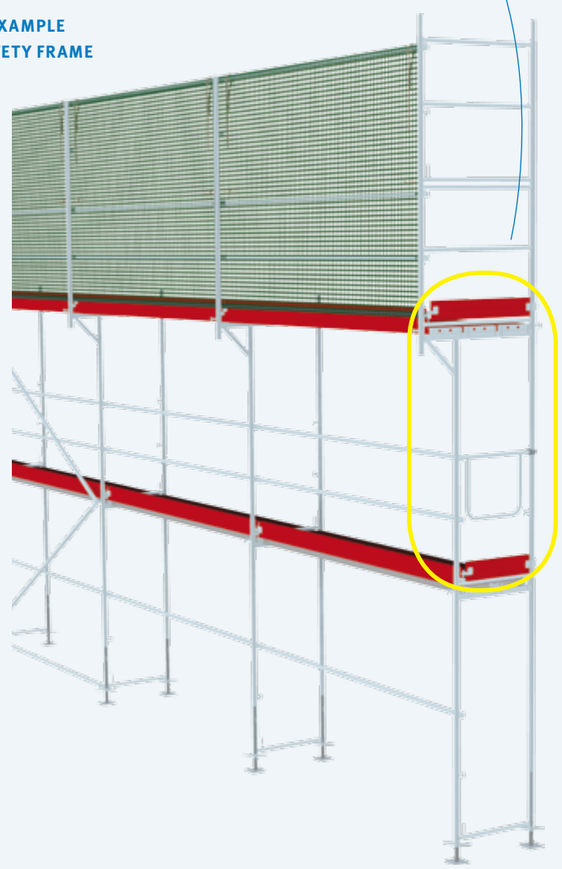

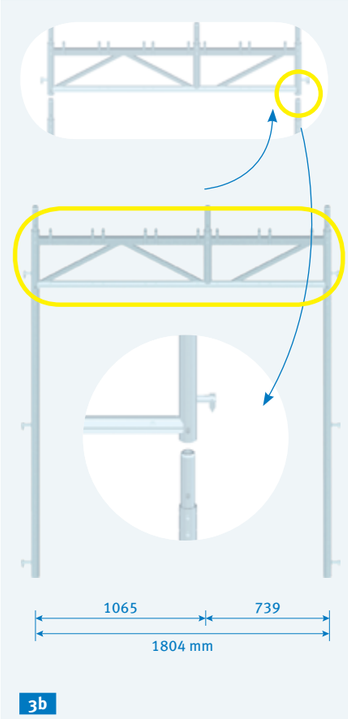

FIG.	DESCRIPTION		DIMENSIONS L/HxW [m]	WEIGHT approx. [kg]	ARTICLE NO.	PRICE [€]
01	**Cantilever frame, steel** ⊕ steel tube ø 48.3 x 2.7 mm, hot-dip galvanised — avoids troublesome scaffolding of projecting façade sections, for working above protruded eaves	1a	2.00 × 0.40	21.4	20 19 040L	**98.20**
		1b	2.00 × 0.59	20.4	20 19 015L	**98.20**
02	**Roof safety frame** ⊕ steel tube ø 48.3 x 2.7 mm, hot-dip galvanised — for continued erection according to 1.10 m grid spacing — tilting and toeboard pins, mounted on both sides, make it suitable for inward and outward bracket broadening		2.00 × 0.74 to 1.10	22.7	20 19 003L	**103.80**
03	**Passageway frame** ⊕ steel tube ø 48.3 x 3.2 mm, hot-dip galvanised, 3-part — 1.80 m or 1.50 m wide passageway for pedestrians enables safer passage beneath the scaffolding — The tilting pins, mounted on both sides, facilitate the installation of side protection on both, the inside and outside. — passageway frame 1.80 m suitable for continued erection with a scaffold width of 0.74 m or 1.10 m — For detailed information on passageway frame applications please refer to the UNIFIX Façade Scaffolding Instructions for Assembly and Use. — space-saving transportation	3a	2.20 × 1.50	34.0	20 19 150	**195.00**
		3b	2.20 × 1.80	37.0	20 19 180	**217.50**

APPLICATION EXAMPLE 3a PASSAGEWAY FRAME

APPLICATION EXAMPLE 1a CANTILEVER FRAME

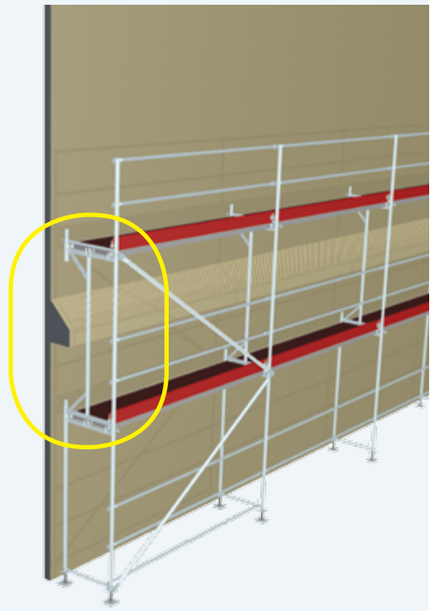

ASSEMBLY FRAMES

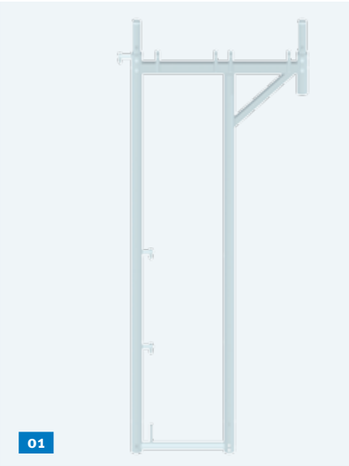

01

APPLICATION EXAMPLE
01 TRANSITION FRAME
0.40 m, STEEL

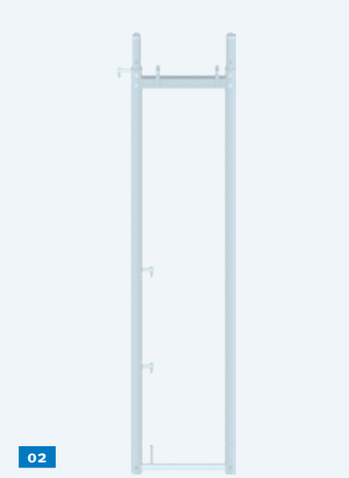

02

APPLICATION EXAMPLE
02 ASSEMBLY FRAME 0.40 m

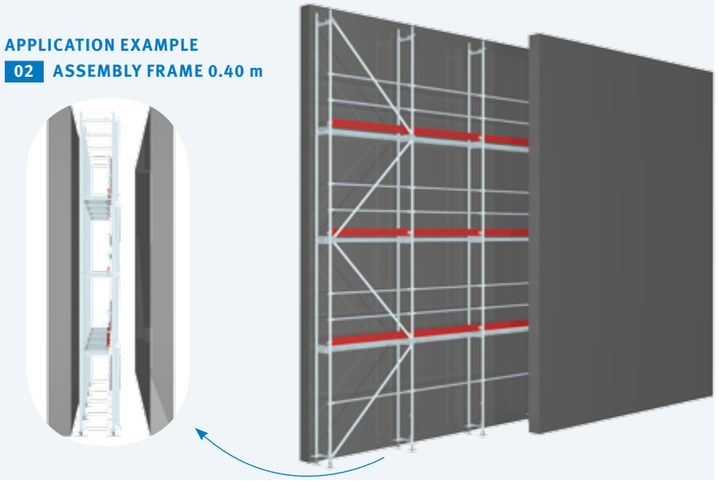

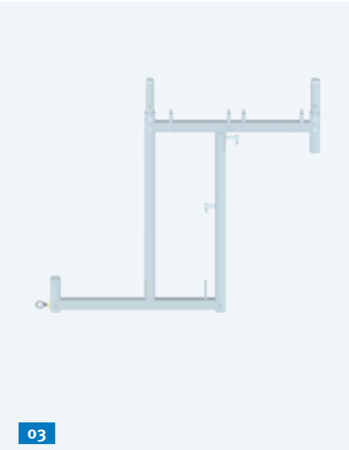

03

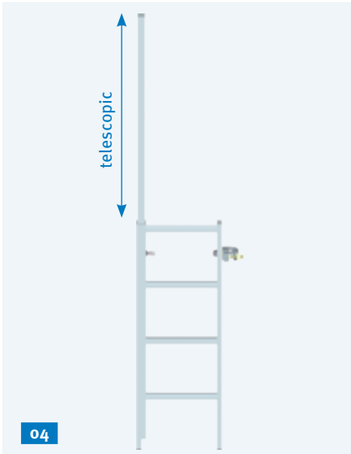

04

APPLICATION EXAMPLE
03 DS BRACKET FRAME AND
04 DS STOREY LADDER

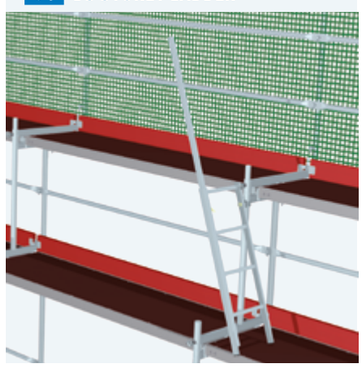

FIG.	DESCRIPTION	DIMENSIONS L/HxW [m]	WEIGHT approx. [kg]	ARTICLE NO.	PRICE [€]
01	**Transition frame 0.40 m, steel** ⊕ steel tube ø 48.3 mm, hot-dip galvanised	2.00 × 0.40 to 0.74 m	19.0	20 19 005L	**97.50**
02	**Assembly frame 0.40 m, steel** ⊕ steel tube ø 48.3 x 3.2 mm, hot-dip galvanised — suitable for niches / recesses	2.00 × 0.40	16.8	20 19 402L	**74.20**
03	**DS bracket frame** ⊕ steel tube ø 48.3 x 3.2 mm, hot-dip galvanised — patented special part — The optimum height for all craft trades. Tilers, plumbers and plasterers can work simultaneously. — By using a DS bracket frame, compensating frames become redundant as the DS bracket frame assumes the function of the latter due to its construction height of 0.99 m. — As it is intended to use the scaffold for various craft trades, a wide range of requirements and prerequisites must be observed. The optimum standing height and the side protection mandatory for the respective trade are of particular importance. With the UNIFIX DS bracket frame, it is possible to work at the same time at the ideal height on both the façade and the eave!	0.99 × 0.74	15.0	20 32 799	**97.95** Special net price
04	**DS storey ladder** ⊕ steel, hot-dip galvanised — equipped with a handrail extendable up to 2 m for safe access to the uppermost level — fastening to the DS bracket frame by means of an integrated halfcoupler	1.00	9.0	11 42 010	**70.15**

APPLICATION EXAMPLE
without 03 DS bracket frame

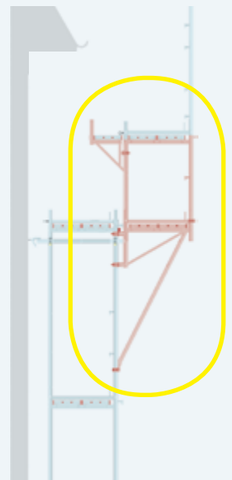

APPLICATION EXAMPLE
with 03 DS bracket frame

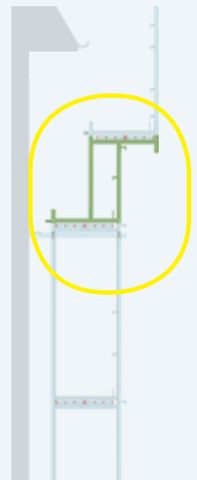

If the scaffolding is used by various craft trades, the time-consuming necessity of completing the required structure from a multiplicity of individual components is eliminated when a UNIFIX DS bracket frame is used.
To the left is an example of the application, for which the following components are optional:
— diagonal cross brace 1.77 m
— bracket 0.74 m
— assembly frame 1.00 x 0.74 m
— bracket 0.32 m
— up to 3 decks, as well as
— intermediate deck
— deck retainer
— gap cover
In addition to lower initial costs, the DS bracket frame ensures enormous time savings during assembly/disassembly as well as a significantly reduced use of material and space-saving transportation.

SCAFFOLDING DECKS / HATCH-TYPE ACCESS DECKS

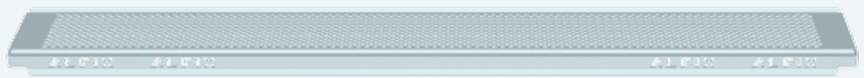

01

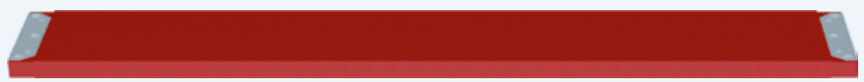

02

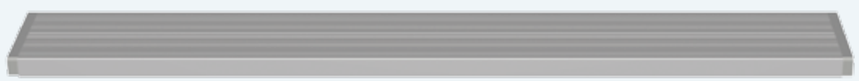

03

04

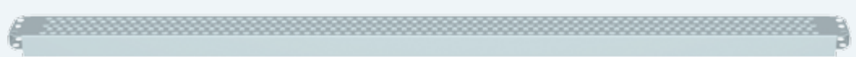

05

06

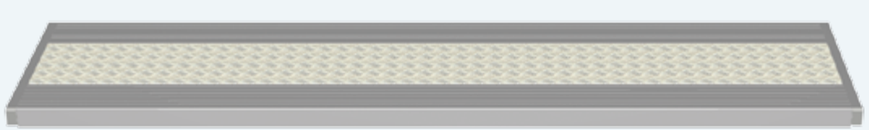

07

FIG.	DESCRIPTION	*LOAD CLASS	DIMENSIONS L/HxW [m]	WEIGHT approx. [kg]	ARTICLE NO.	PRICE [€]
01	**Steel deck,0.32 m** hot-dip galvanised, perforated — high load-bearing capacity — non-slip surface	6	0.74 × 0.32	5.3	22 21 074	**50.50**
		6	1.10 × 0.32	7.6	22 21 110	**52.00**
		6	1.50 × 0.32	11.1	22 21 150	**59.50**
		6	2.00 × 0.32	13.4	22 21 200	**66.50**
		5	2.50 × 0.32	16.8	22 21 250	**72.50**
		4	3.00 × 0.32	20.1	22 21 300	**82.50**
02	**Wooden deck, 0.32 m** bonded, thickness: 48 mm — impregnated, triple bonding standard — secured by a system-compatible steel head piece at both ends	6	0.50 × 0.32	4.5	22 31 050	**36.30**
		6	0.74 × 0.32	5.5	22 31 070	**32.60**
		6	1.00 × 0.32	8.2	22 31 100	**42.30**
		6	1.10 × 0.32	8.2	22 31 110	**38.00**
		6	1.50 × 0.32	11.0	22 31 150	**43.20**
		5	2.00 × 0.32	14.3	22 31 200	**49.80**
		4	2.50 × 0.32	18.3	22 31 250	**55.90**
		3	3.00 × 0.32	22.6	22 31 300	**62.50**
03	**Solid aluminium deck, 0.32 m** profile height: 48 mm — completely made of aluminium — consisting of hollow chamber profiles with non-slip longitudinal grooves — downward facing stacking bead enables easy stackability, prevents water / ice deposition	6	1.10 × 0.32	4.7	22 11 110	**79.95**
		6	1.50 × 0.32	6.1	22 11 150	**94.00**
		6	2.00 × 0.32	8.0	22 11 200	**109.00**
		5	2.50 × 0.32	9.9	22 11 250	**130.00**
		4	3.00 × 0.32	11.9	22 11 300	**150.00**
		3	4.00 × 0.32	15.7	22 11 400	**275.00**
04	**Frame platform, 0.64 m** aluminium, screen-printed plywood plated surface (SPP) — lightweight — standard width 64 cm — replaceable fixture and deck	3	1.50 × 0.64	11.4	22 02 150	**119.30**
		3	2.00 × 0.64	14.5	22 02 200	**133.20**
		3	2.50 × 0.64	17.9	22 02 250	**170.00**
		3	3.00 × 0.64	20.9	22 02 300	**178.50**
		3	4.00 × 0.32	18.7	22 01 400	**195.05**
05	**Intermediate deck, steel** hot-dip galvanised — serves to close gaps in plank/deck surfaces of varying deck widths — predominantly required for surface-oriented birdcage scaffolds	6	0.74 × 0.14	4.6	22 25 074	**54.35**
		6	1.10 × 0.14	6.4	22 25 110	**56.95**
		6	1.50 × 0.14	8.8	22 25 150	**58.50**
		6	2.00 × 0.14	11.6	22 25 200	**67.50**
		5	2.50 × 0.14	14.3	22 25 250	**84.50**
		4	3.00 × 0.14	17.1	22 25 300	**89.50**
		3	4.00 × 0.14	19.1	22 25 400	**94.45**
06	**Gap cover** wood, thickness: 50 mm — inserted between the decks — for covering constructively induced gaps on the bracket level	3	2.00 × 0.14	8.3	22 33 200	**47.25**
		3	2.50 × 0.14	10.7	22 33 250	**50.40**
		3	3.00 × 0.14	12.7	22 33 300	**54.20**
07	**Lightweight deck, 0.64 m** — extremely lightweight aluminium deck, profile height approx. 50 mm — combination of hollow chamber profiles and aluminium chequer plates — non-slip surface, easy to stack — with plastic handle recess	4	1.50 × 0.64	11.8	22 13 150	**110.80**
		4	2.00 × 0.64	15.5	22 13 200	**189.00**
		4	2.50 × 0.64	18.7	22 13 250	**226.00**
		3	3.00 × 0.64	22.6	22 13 300	**260.00**

* A load class overview is available under "Technical Details" on page 50.

SCAFFOLDING DECKS / HATCH-TYPE ACCESS DECKS

01

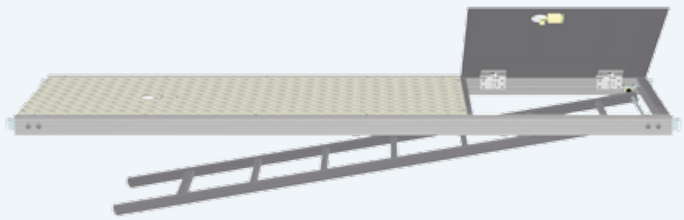

02

03

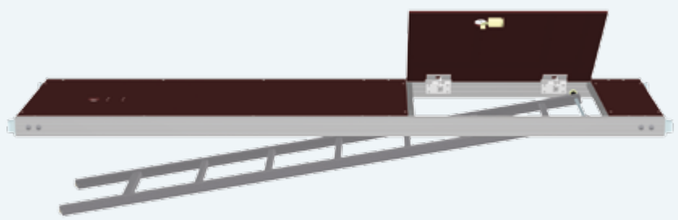

04

05

Normally, the installation of access hatches is carried out by alternating one above the other. The bottom-most footfall level is to be created by system decks and serves as a set-up area for the first storey ladder (see fig. on page 3). The hatch and ladder latches enable an easy release from both the upper and the lower layer and ensure that the access hatch and storey ladder are safe and secure. The patented scissor hinge ensures the access hatch functions reliably. For more security against sliding during transportation or assembly and to prevent pinching fingers, the ladder suspension hardware is additionally equipped with a spacer sleeve on both sides.

06

APPLICATION EXAMPLE

05 STEEL PLANK with locking pin and spring cotter

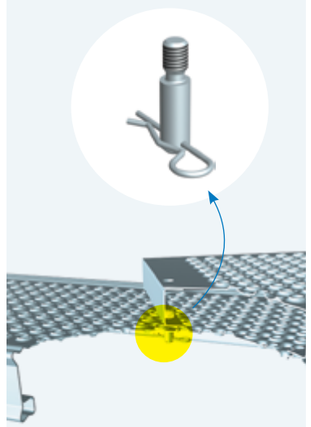

FIG.	DESCRIPTION	*LOAD CLASS	DIMENSIONS L/HxW [m]	WEIGHT approx. [kg]	ARTICLE NO.	PRICE [€]
01	**Hatch-type access deck with ladder SPP, 0.64 m** aluminium, screen-printed plywood plated surface (SPP) — practical and dependable ladder and hatch latching — with water-resistant screen-printed plywood plated surface	3	2.50 × 0.64	22.5	22 04 250	**282.50**
		3	3.00 × 0.64	25.6	22 04 300	**322.50**
02	**Hatch-type access deck with ladder WBQ, 0.64 m** ⊕ aluminium, chequer plate surface (WBQ) — exceptionally durable and weatherproof — completely made of aluminium for special requirements, e.g. for industrial scaffoldings (fire retardancy)	3	2.50 × 0.64	28.0	22 07 250	**312.50**
		3	3.00 × 0.64	31.9	22 07 300	**345.00**
03	**Hatch-type access deck without ladder SPP, 0.64 m** aluminium, screen-printed plywood plated surface (SPP) — with water-resistant screen-printed plywood plated surface — with hatch notches for storey ladder (see p. 14 - 15)	3	1.50 × 0.64	14.9	22 05 150	**183.55**
		3	2.00 × 0.64	15.6	22 05 200	**241.35**
		3	2.50 × 0.64	17.5	22 05 250	**247.55**
		3	3.00 × 0.64	19.8	22 05 300	**273.25**
04	**Hatch-type access deck with ladder SPP, 0.64 m** aluminium, screen-printed plywood plated surface (SPP) — shifted hatch-type access with step tread — with water-resistant screen-printed plywood plated surface	3	2.50 × 0.64	23.0	22 09 250	**291.70**
		3	3.00 × 0.64	26.1	22 09 300	**333.80**
05	**Steel plank** ⊕ hot-dip galvanised — with locking pin and spring cotter — for covering or closing corner areas or other structurally induced openings — positioning solely on steel decks — An overlapping length of 25 cm is required!	6	1.00 × 0.30	5.5	12 24 100	**53.65**
		6	1.50 × 0.30	8.0	12 24 150	**63.90**
		5	2.00 × 0.30	10.5	12 24 200	**73.00**
		3	2.50 × 0.30	12.8	12 24 250	**82.90**
06	**Spring cotter** ⊕ steel, zinc-plated — spare part for item 05			0.03	73 04 006	**0.50**

* A load class overview is available under "Technical Details" on page 50.

DETAILED IMAGE

02 HATCH-TYPE ACCESS DECK WITH LADDER (WBQ)

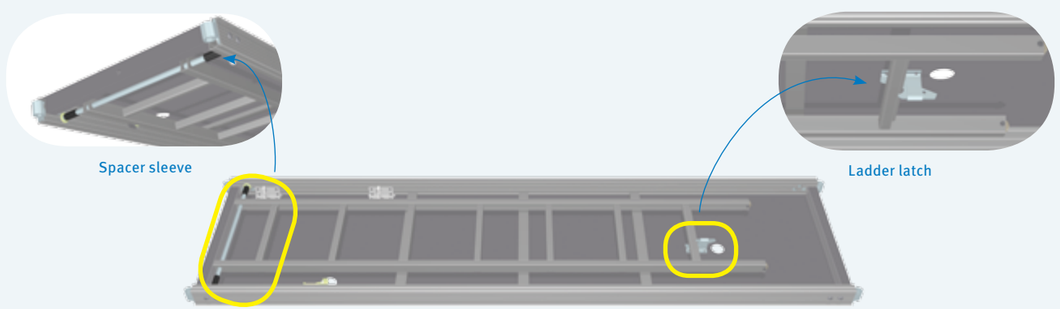

STAIRWAYS

1a

1b

02

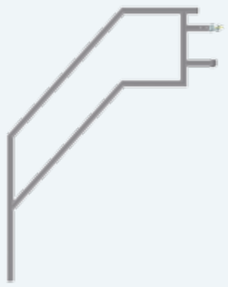

03

STAIRWAY TOWER MADE OF ALFIX MODUL METRIC SYSTEM COMPONENTS

Please refer to our comprehensive stairway and stairway accessories programme in the ALFIX MODUL METRIC catalogue and the ALFIX MODUL MULTI stairway tower brochure.

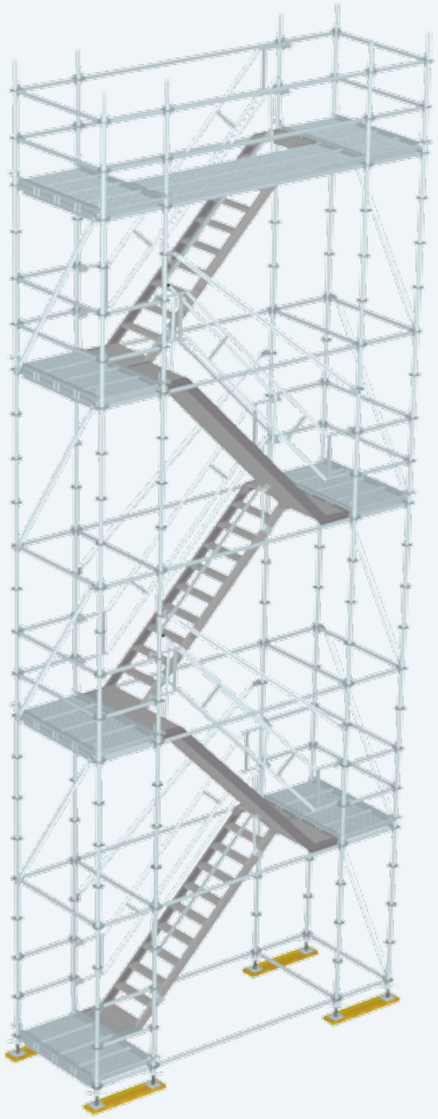

FIG.	DESCRIPTION		DIMENSIONS L/HxW [m]	WEIGHT approx. [kg]	ARTICLE NO.	PRICE [€]
01	**Storey ladder** for storey height 2.00 m — supplementary for hatch-type access decks without integrated storey ladder — suitable for bridging individual scaffold layers	1a steel hot-dip galvanised	2.00 × 0.40	8.1	11 42 000	**50.40**
		1b aluminium	2.00 × 0.40	3.7	11 32 001	**59.00**
02	**Initial stairway, aluminium** ⊕ — at the platform with system fixture — with tubular sleeves at the bottom for accommodating base jacks — width: 0.62 m		1.40 × 1.00	17.7	22 98 100	**247.50**
03	**Stair guardrail, aluminium** ⊕ — for 02 initial stairway, aluminium — with halfcoupler		1.40 × 1.00	5.8	12 98 101	**106.10**

APPLICATION EXAMPLE

02 INITIAL STAIRWAY, ALUMINIUM
03 STAIR GUARDRAIL FOR INITIAL STAIRWAY, ALUMINIUM

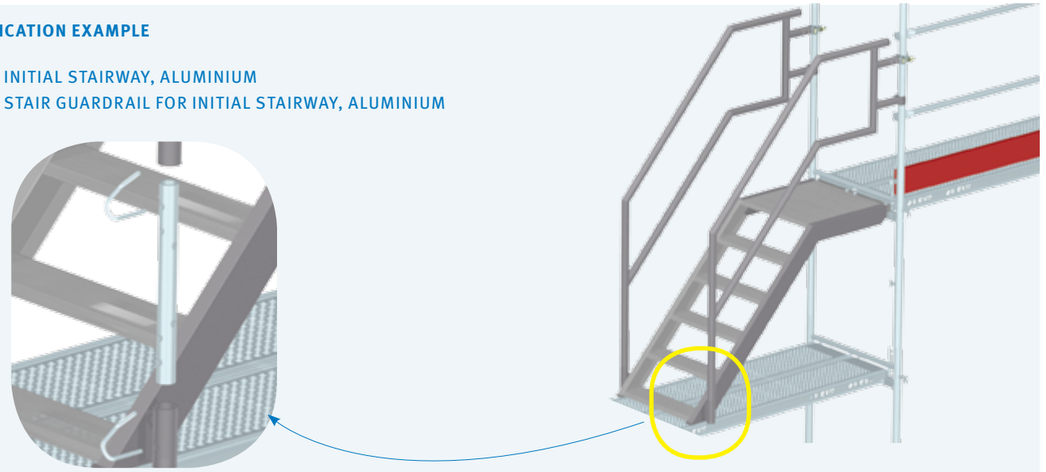

APPLICATION EXAMPLE

02 INITIAL STAIRWAY, ALUMINIUM
03 STAIR GUARDRAIL FOR INITIAL STAIRWAY, ALUMINIUM

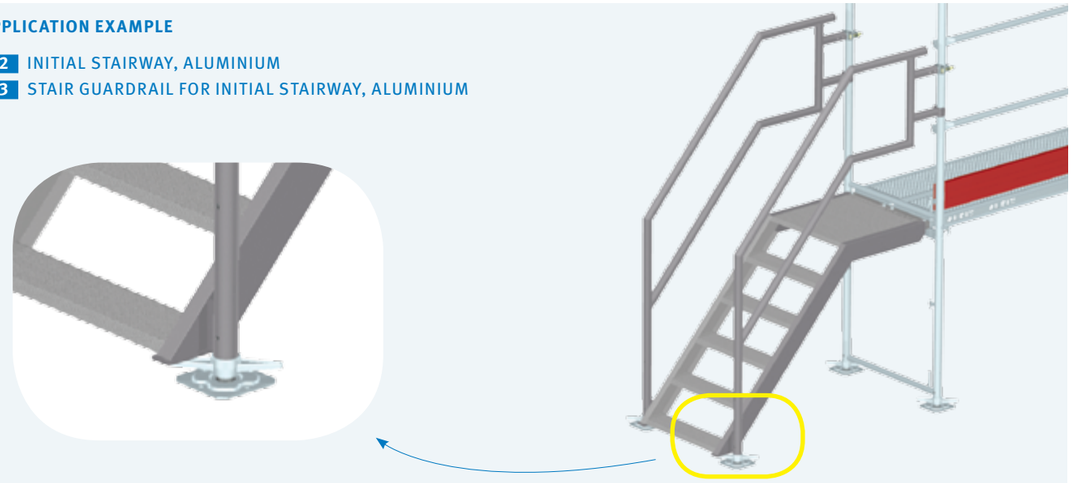

STAIRWAYS

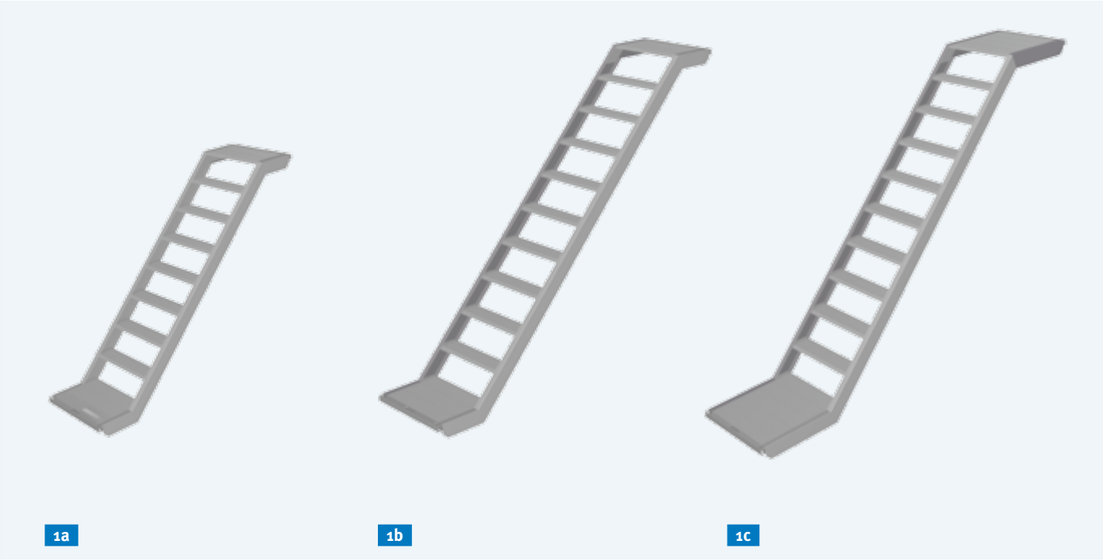

DETAILED IMAGE

01 STAIRWAY, ALUMINIUM

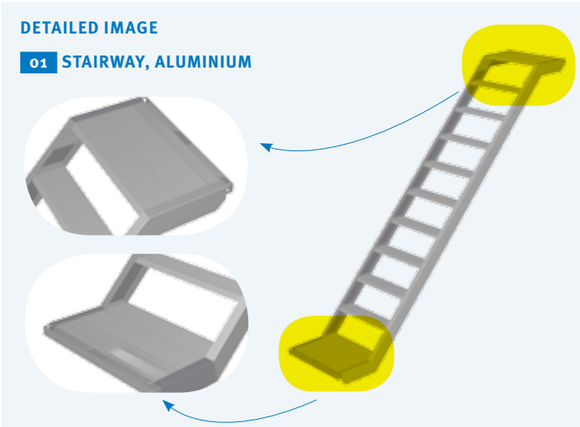

APPLICATION EXAMPLE

04 STRINGER FALL PROTECTION

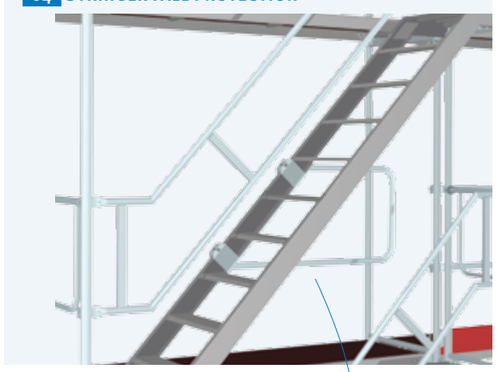

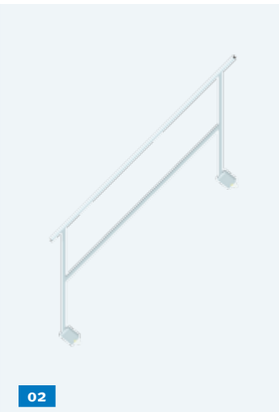

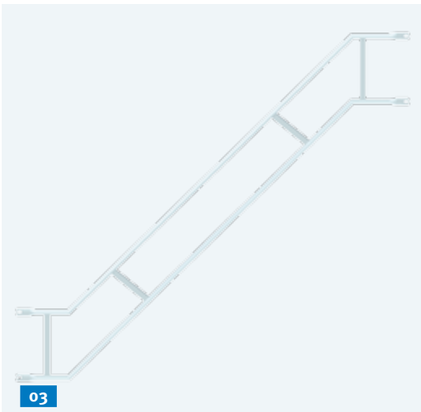

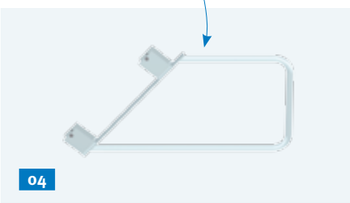

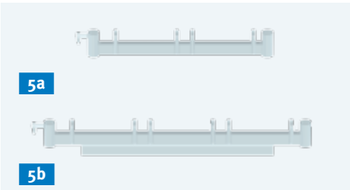

FIG.	DESCRIPTION		DIMENSIONS L/HxW [m]	WEIGHT approx. [kg]	ARTICLE NO.	PRICE [€]
01	**Stairway, aluminium** ⊕ safe max. load 2 kN or 200 kg/m² (load class 3) — with system fixture, 10 steps, rise 20 cm — suitable for platform stairway tower applications — width: 0.64 m	1a	2.00 × 1.50	23.5	22 98 200	**322.45**
		1b	2.50 × 2.00	27.6	22 98 250	**409.00**
		1c	3.00 × 2.00	31.0	22 98 300	**455.00**
02	**Inner guardrail for aluminium stairway, height 2.00 m** steel tube ø 33.7 mm, hot-dip galvanised — compatible with aluminium stairway — for applications with alternating stair flight — incl. hinged pin 12 x 70 mm with snap-in locking mechanism		2.00	13.3	11 31 000	**103.00**
03	**Stair guardrail, steel** ⊕ steel tube ø 38.0 mm — compatible with aluminium stairway — with system fixture		2.00 × 1.50	12.3	22 98 201	**71.15**
			2.50 × 2.00	14.9	22 98 251	**112.00**
			3.00 × 2.00	16.4	22 98 301	**122.00**
04	**Stringer fall protection** ⊕ steel tube ø 33.7 mm, hot-dip galvanised — incl. hinged pin 12 x 70 mm with snap-in locking mechanism — for lateral fall protection of a circumferential bay when using aluminium stairways		1.00 × 0.50	8.8	11 31 001	**54.70**
05	**Transom member** ⊕ steel, hot-dip galvanised — serves as initial element for stairways and support surface for the lowermost storey ladder	5a	0.74	4.1	24 03 070	**38.50**
		5b	1.10	8.4	24 03 110	**45.50**

APPLICATION EXAMPLE

01 STAIRWAY, ALUMINIUM
03 STAIR GUARDRAIL, STEEL
05 TRANSOM MEMBER

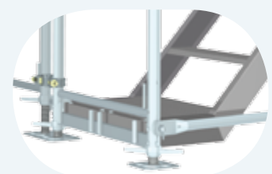

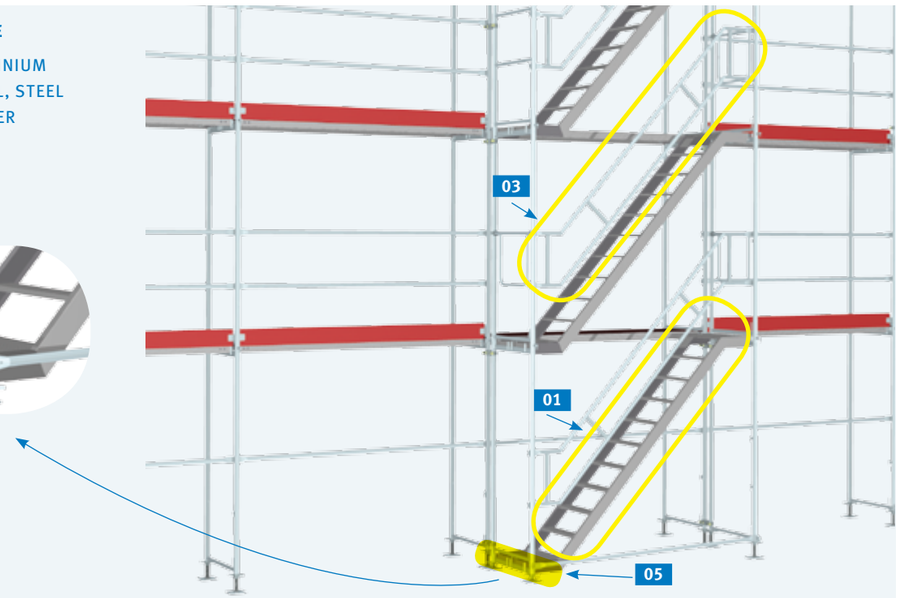

SIDE PROTECTION / REAR GUARDRAILS

01

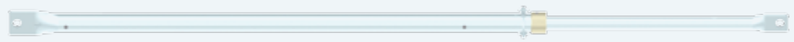

02

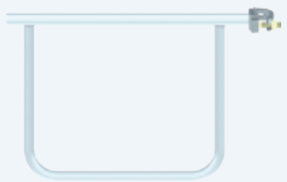

3a

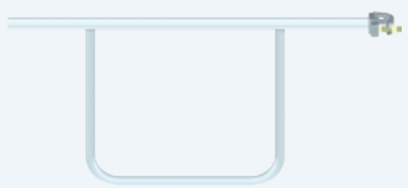

3b

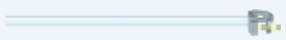

4a

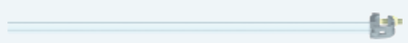

4b

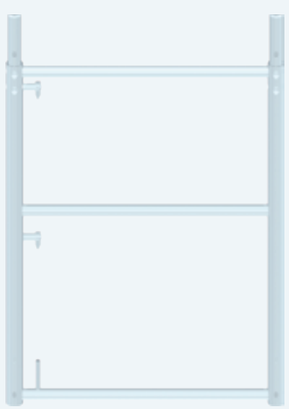

5a

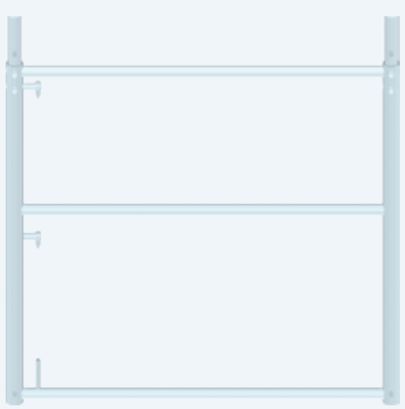

5b

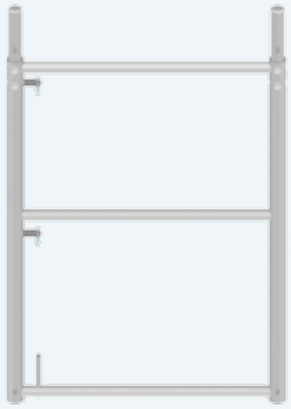

5c

FIG.	DESCRIPTION		DIMENSIONS L/HxW [m]	WEIGHT approx. [kg]	ARTICLE NO.	PRICE [€]
01	**Rear guardrail** steel tube ø 38 mm, hot-dip galvanised — for implementation of side protection — attachment with tilting pins — available for all bay lengths — rear guardrails can also be used as horizontal struts (see p. 23)		0.74	1.3	20 60 070	**13.00**
			1.10	1.8	20 60 110	**13.50**
			1.50	2.5	20 60 150	**14.50**
			2.00	3.4	20 60 200	**15.00**
			2.50	4.1	20 60 250	**16.00**
			3.00	6.1	20 60 300	**17.00**
			4.00	6.7	20 60 400	**34.00**
02	**Telescopic guardrail** steel, hot-dip galvanised — adjustable length (extendable tube) — incl. hinged pin with snap-in locking mechanism to ensure transportation safety		1.50 – 2.50	5.9	20 99 000	**55.05**
03	**Double end guardrail** steel tube ø 33.7 / 26.9 mm, hot-dip galvanised — suitable as end side protection	3a wrench size 22	0.74	3.5	20 62 070	**28.50**
		3b wrench size 22	1.10	4.1	20 62 110	**32.50**
04	**End guardrail, single** steel tube ø 33.7 mm, hot-dip galvanised — suitable as end side protection	4a wrench size 22	0.74	1.8	20 66 070	**16.00**
		4b wrench size 22	1.10	2.4	20 66 110	**18.00**
05	**End guardrail frame** ⊕ steel tube ø 48.3 mm, hot-dip galvanised — forms end side protection and deck retainer on the top layer	5a steel	1.00 × 0.74	12.1	20 67 070L	**57.50**
		5b steel	1.00 × 1.10	15.7	20 67 110L	**65.00**
		5c aluminium	1.00 × 0.74	5.8	20 67 074	**82.20**

APPLICATION EXAMPLE

5a END GUARDRAIL FRAME and **DISTANCE COUPLER**

(see p. 40 - 41)

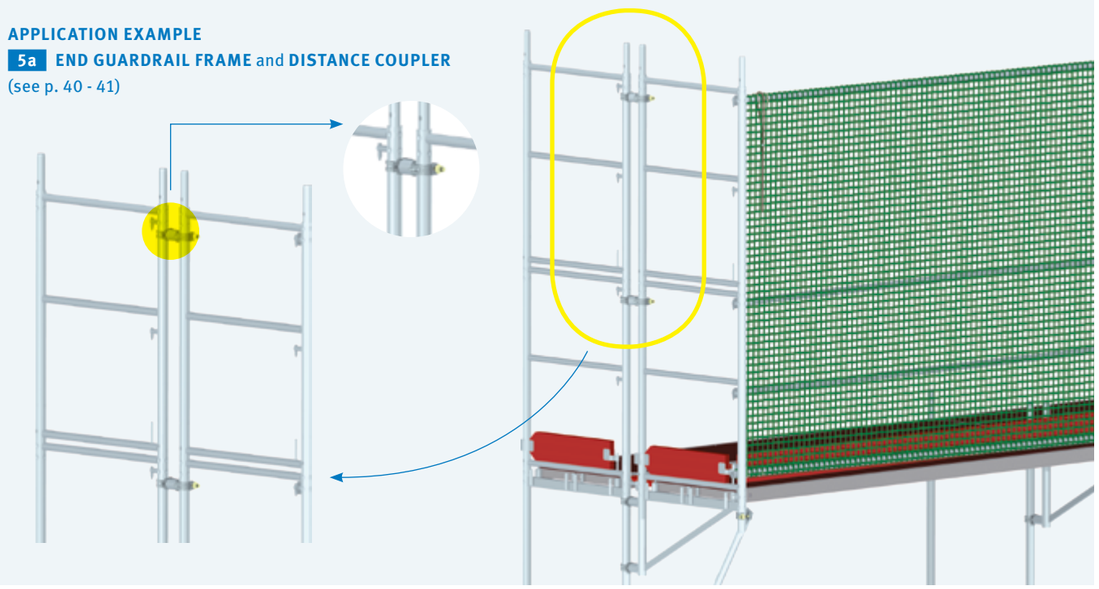

SIDE PROTECTION / REAR GUARDRAILS

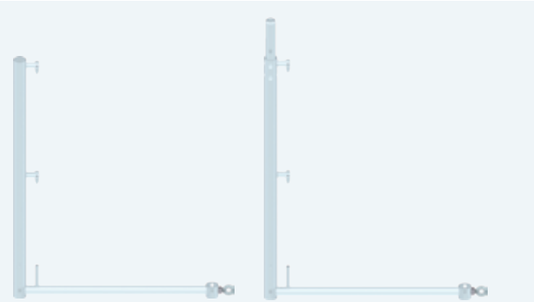

1a without spigot fitting 1c with spigot fitting

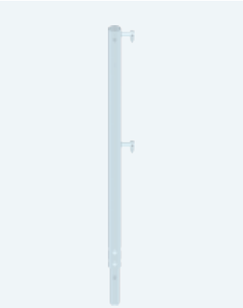

02

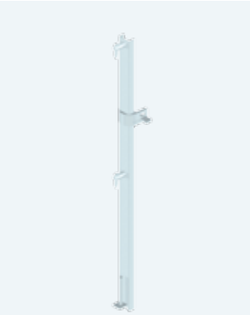

03

APPLICATION EXAMPLE

The **spigot fittings inside the guardrail posts** facilitate putting together two posts and thus ensuring a simple and space-saving warehousing and transportation.

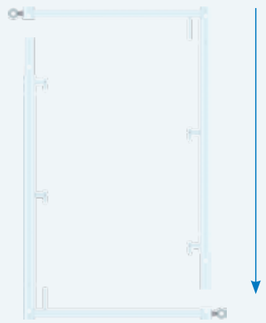

APPLICATION EXAMPLE
03 INTERNAL GUARDRAIL POST

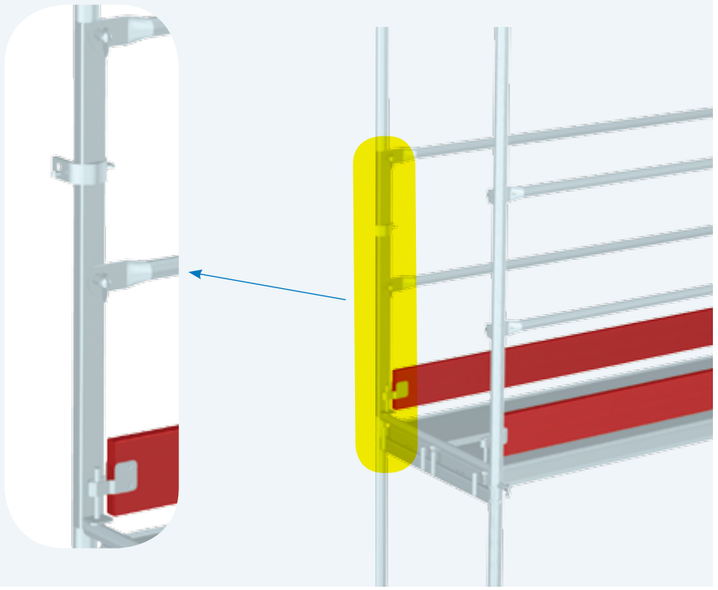

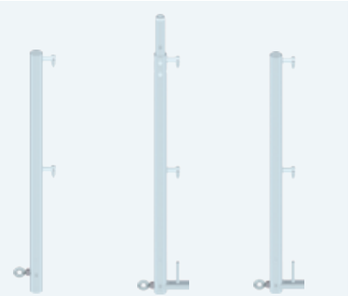

4a 4b 4c

5a 5b

FIG.	DESCRIPTION		DIMENSIONS L/HxW [m]	WEIGHT approx. [kg]	ARTICLE NO.	PRICE [€]
01	**Guardrail post** ⊕ steel tube ø 48.3 / 33.7mm, hot-dip galvanised — serves simultaneously as upper deck retainer	1a without spigot fitting	1.00 × 0.74	5.3	20 64 070L	**34.00**
		1b without spigot fitting (without fig.)	1.00 × 1.10	6.8	20 65 111	**35.50**
		1c with spigot fitting	1.00 × 0.74	6.2	20 64 071L	**37.65**
02	**Guardrail post extension** steel tube ø 48.3 mm, hot-dip galvanised, with spigot fitting — can be fitted onto guardrail posts without spigot fitting or used as an extension		1.00	4.2	20 64 101L	**25.65**
03	**Internal guardrail post** ⊕ steel, hot-dip galvanised — with 2 tilting pins and toeboard pin — for the quick construction of a 3-part side protection (internal)		1.00	3.3	20 65 713	**33.00**
04	**Guardrail post, single** ⊕ steel tube ø 48.3 mm, hot-dip galvanised	4a without spigot fitting, without deck retainer	1.00	3.4	20 65 100L	**23.00**
		4b with spigot fitting, with short deck retainer	1.00	4.5	20 65 101L	**32.50**
		4c without spigot fitting, with short deck retainer	1.00	3.6	20 65 102L	**28.20**
05	**Upper deck retainer** steel tube ø 33.7 mm, hot-dip galvanised — one side with socket ø 48.3 mm and locking screw — one side with socket ø 57 mm to attach the 4a single guardrail post	5a with toeboard holder	0.74	1.8	20 48 070	**19.00**
		5b with toeboard holder	1.10	3.0	20 48 110	**23.00**

APPLICATION EXAMPLE
1a GUARDRAIL POST

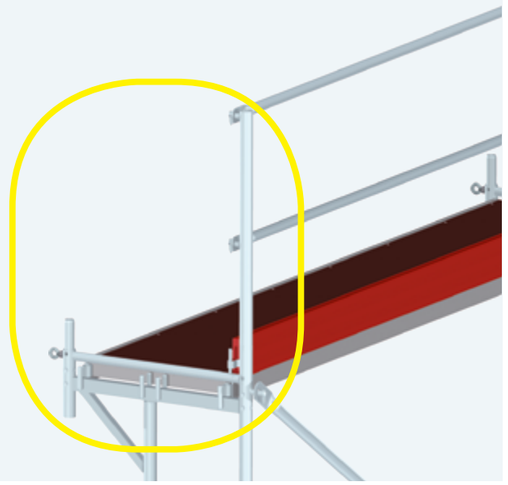

APPLICATION EXAMPLE
4c GUARDRAIL POST, SINGLE
5a UPPER DECK RETAINER

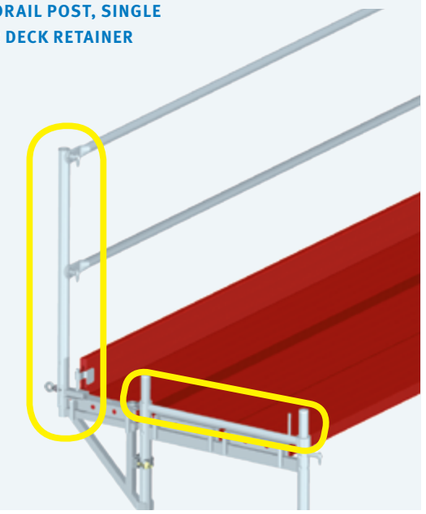

SIDE PROTECTION / TOEBOARDS

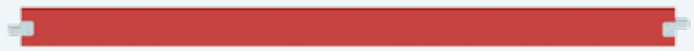

01

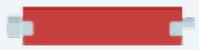

02 0.74 m

APPLICATION EXAMPLE
03 TOEBOARD COUPLER

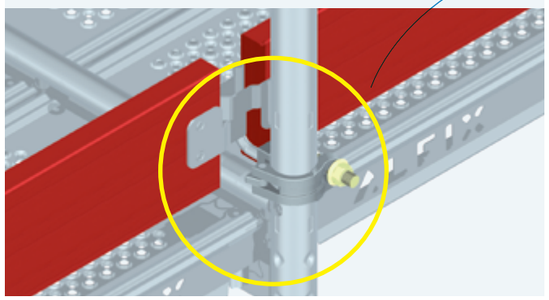

03

04

05

APPLICATION EXAMPLE
04 SAFETY SIDE MESHGUARD
05 GUARD NET SYSTEM
06 SAFETY MESHGUARD POST

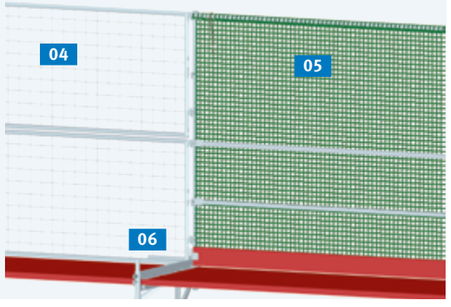

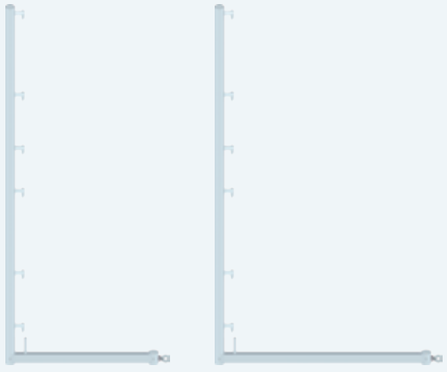

06 0.74 m 1.10 m

FIG.	DESCRIPTION	DIMENSIONS L/HxW [m]	WEIGHT approx. [kg]	ARTICLE NO.	PRICE [€]
01	**Toeboard, wood** — impregnated wood (weather-proof) — secured by means of toeboard pins or toeboard coupler — framed with fittings, height 15 cm	0.74	1.8	22 50 070	**13.50**
		1.10	2.4	22 50 110	**13.90**
		1.50	4.0	22 50 150	**14.20**
		2.00	5.0	22 50 200	**15.00**
		2.50	6.5	22 50 250	**16.50**
		3.00	7.5	22 50 300	**17.80**
		4.00	10.0	22 50 400	**49.00**
02	**End toeboard, wood** — impregnated wood (weather-proof) — secured by means of toeboard pins or toeboard coupler — framed with fittings, height 15 cm	0.74	1.5	22 51 070	**13.50**
		1.10 (without fig.)	2.3	22 51 110	**13.90**
03	**Toeboard coupler** steel, zinc-plated ⊕	wrench size 22	0.6	13 13 022	**13.60**
04	**Safety side meshguard** ⊕ steel tube ø 38 mm, hot-dip galvanised — with fixture for tilting pins — suitable for roof safety scaffolding — if a safety net post is used, two safety side meshguards are mounted one above the other	1.50 × 1.00	10.4	24 27 150	**115.00**
		2.00 × 1.00	12.4	24 27 200	**130.00**
		2.50 × 1.00	14.4	24 27 250	**145.00**
		3.00 × 1.00	16.4	24 27 300	**160.00**
05	**Guard net system*** ⊕ pre-finished, mesh size 100 mm — incl. rear guardrail and aluminium tube with spigot fitting — with integrated fixing cords (left and right)	2.00 × 2.00	13.0	24 22 200	**141.60**
		2.50 × 2.00	14.0	24 22 250	**154.35**
		3.00 × 2.00	15.0	24 22 300	**177.10**
06	**Safety meshguard post** ⊕ steel tube ø 48.3 mm, hot-dip galvanised — each with 6 tilting pins for suspension of safety meshguards or guard net systems — suitable for roof safety scaffolding	2.00 × 0.74	10.0	24 27 207	**79.50**
		2.00 × 1.10	13.8	24 27 201	**81.50**

* see the ALFIX Accessories Catalogue for alternative system-independent nets

EXTENSION PARTS

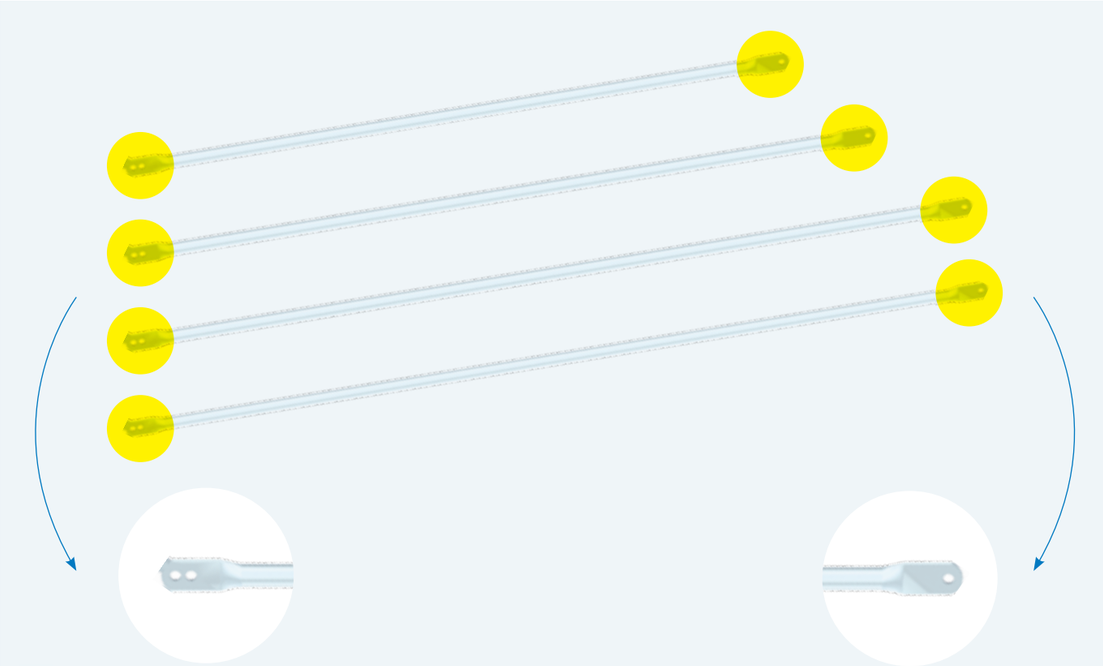

01

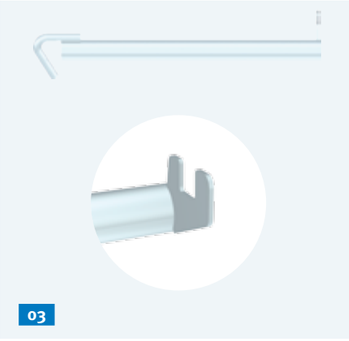

03

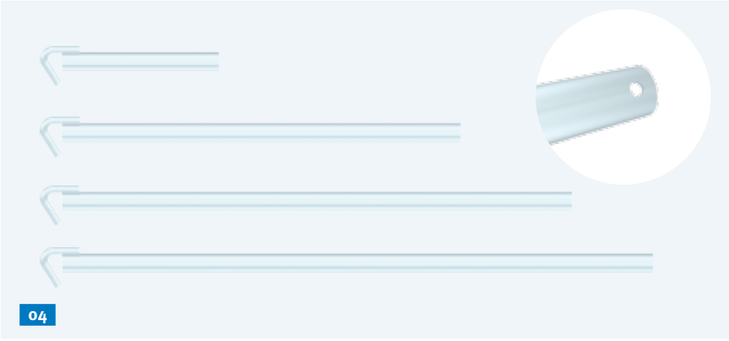

04

APPLICATION EXAMPLE
Diagonal brace fixture
with tilting pins

APPLICATION EXAMPLE
02 LOWER DIAGONAL BRACE FIXTURE

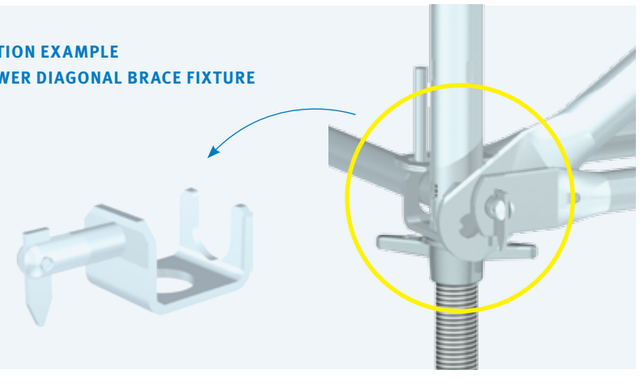

FIG.	DESCRIPTION		DIMENSIONS L/HxW [m]	WEIGHT approx. [kg]	ARTICLE NO.	PRICE [€]
01	**Diagonal brace** ⊕ steel tube ø 48.3 x 3.2 mm, hot-dip galvanised, fixture by means of assembly frame tilting pins — for vertical bracing of scaffolding	for bay height 2.00 m	1.50	7.8	21 01 250	**23.00**
			2.00	8.9	21 01 283	**25.00**
			2.50	10.0	21 01 320	**27.00**
			3.00	11.2	21 01 361	**29.50**
			4.00	16.5	21 01 445	**39.00**
		for bay height 1.00 m	2.50	7.8	21 01 269	**24.50**
			3.00	8.8	21 01 316	**26.50**
02	**Lower diagonal brace fixture** ⊕ steel, hot-dip galvanised — serves as lower suspension for diagonals, or to receive rear guardrails used as a horizontal strut			0.7	21 28 000	**6.00**
03	**Quick-release anchor** steel tube ø 48.3 mm, hot-dip galvanised — with hook and anti-twist guiding plate for mounting beneath the transom member — adjustable wall clearance — fastened with one standard coupler beneath the transom member		0.70	3.0	23 62 070	**16.50**
04	**Spacing tube** steel tube ø 48.3 mm, hot-dip galvanised — installed with two standard couplers at both frame tubes, from a length of 1.00 m — with borehole (attachment of the EIFS anchoring system, see p. 30 - 31)		0.40	1.5	13 61 040	**9.40**
			1.00	3.3	13 61 100	**14.80**
			1.30	4.2	13 61 130	**17.35**
			1.50	4.8	13 61 150	**20.10**

APPLICATION EXAMPLE
01 DIAGONAL BRACE and rear guardrail (see p. 18 - 19) attached to two
02 LOWER DIAGONAL BRACE FIXTURES, used as a horizontal strut

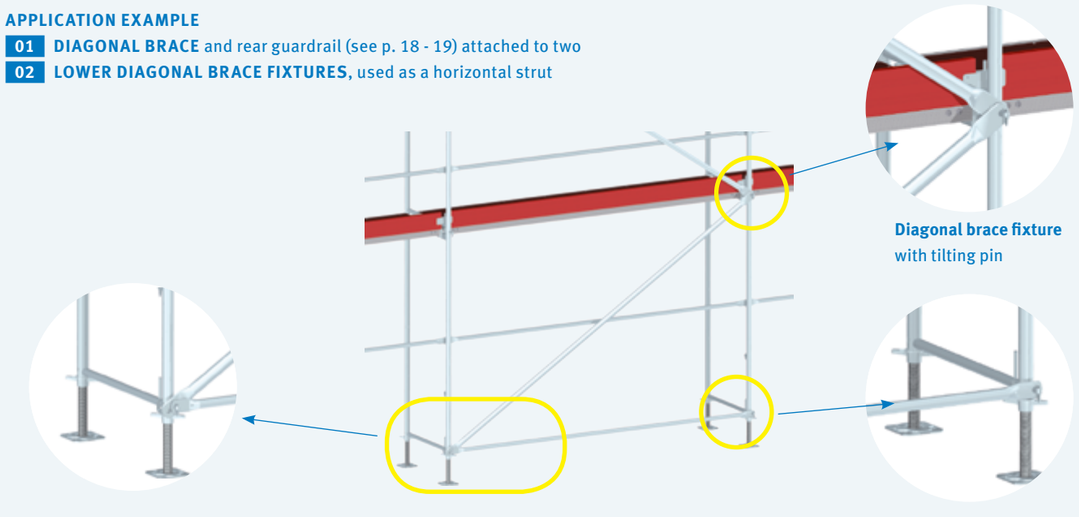

EXTENSION PARTS

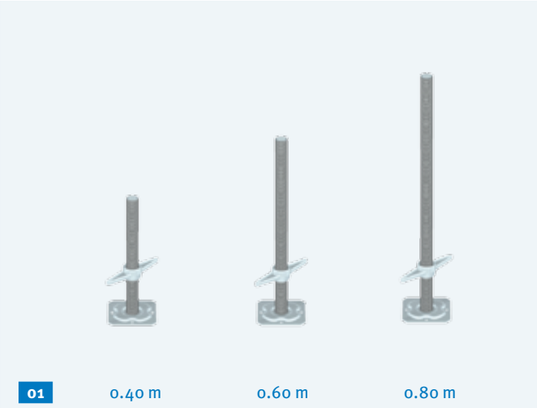

01 0.40 m 0.60 m 0.80 m

02

03

APPLICATION EXAMPLE
05 **ROLLING BEAM**, universal design, movable

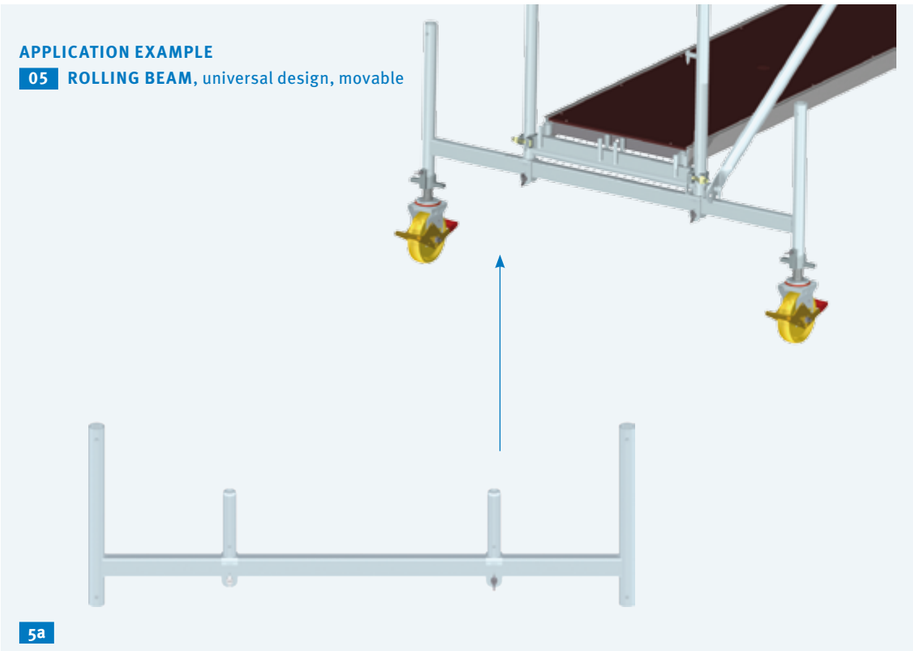

5a

04

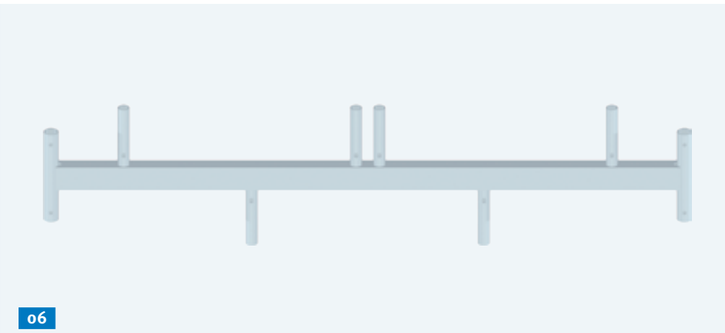

06

07

FIG.	DESCRIPTION	SPINDLE TRAVEL [max.]	DIMENSIONS L/HxW [m]	WEIGHT approx. [kg]	ARTICLE NO.	PRICE [€]
01	**Base jack** steel, hot-dip galvanised — baseplate 15 x 15 cm, threaded tube 38 mm	0.25	0.40	3.0	11 51 040	**13.95**
		0.45	0.60	3.6	11 51 060	**15.20**
		0.60	0.80	4.4	11 51 080	**21.80**
02	**Base jack, swivelling** steel, hot-dip galvanised — baseplate 15 x 15 cm, threaded tube 38 mm	0.45	0.60	4.5	11 52 060	**33.80**
03	**Levelling tube** ⊕ steel, hot-dip galvanised — to equalise, for example, stair ends — secured by locking clip — height adjustment via 120 mm hole spacing		1.80	6.4	13 60 180	**33.35**
04	**Locking clip** steel, hot-dip galvanised — additional safeguard for scaffolding components			0.13	14 50 000	**1.00**
05	**Rolling beam, universal design** ⊕ steel, hot-dip galvanised — with two adjustable spigot fittings	5a	1.60	10.7	30 07 510	**63.40**
		5b (without fig.)	2.00	14.6	30 07 610	**87.50**
06	**UNIFIX rolling beam** steel, hot-dip galvanised — to assemble rolling scaffolds — with spigot fittings at different positions for various modes of erection and fitting		2.00	18.6	24 10 200	**117.60**
07	**Castor wheel** steel, zinc-plated, wheel type: plastic ø 200 mm — castor with twinbrake lever — load centering — with threaded tube Ø 38 mm for adjusting the height — permissible max. load: 10 kN	0.35	0.50	6.5	14 12 007	**120.00**

APPLICATION EXAMPLE
03 **LEVELLING TUBE**

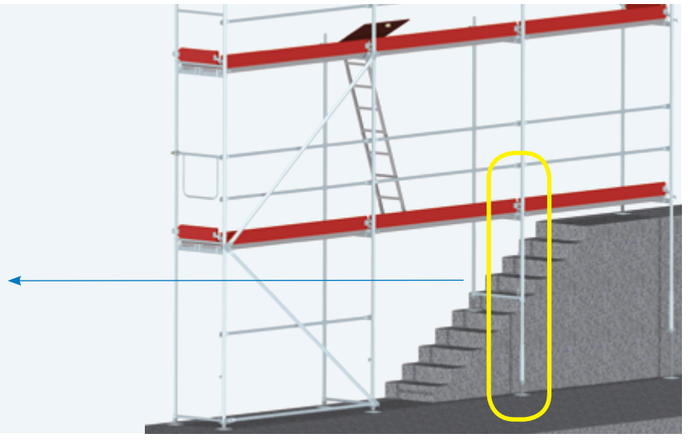

EXTENSION PARTS

APPLICATION EXAMPLE
1a TRANSOM MEMBER WITH COUPLERS

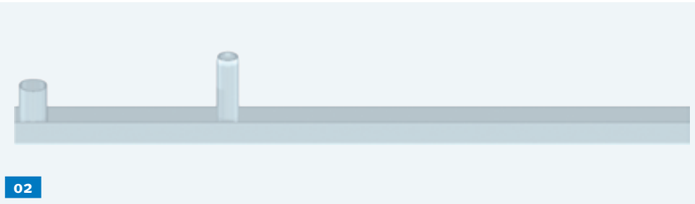

APPLICATION EXAMPLE
3a PLATFORM TRANSOM MEMBER

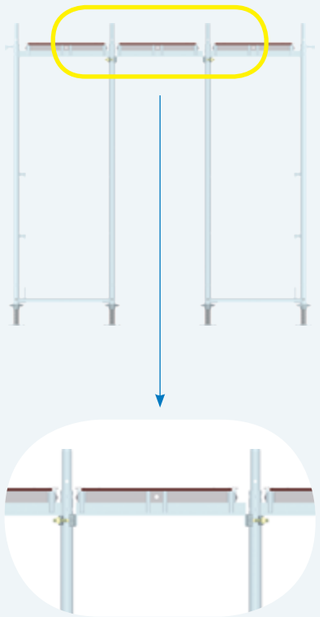

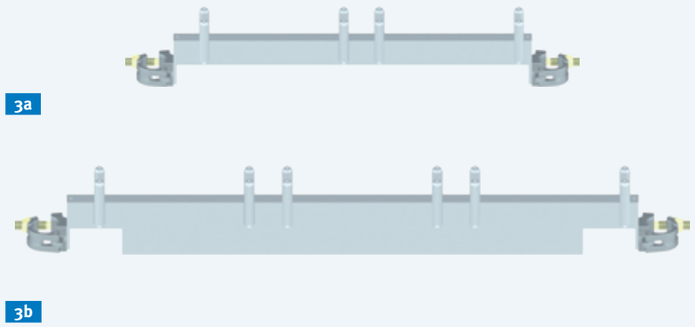

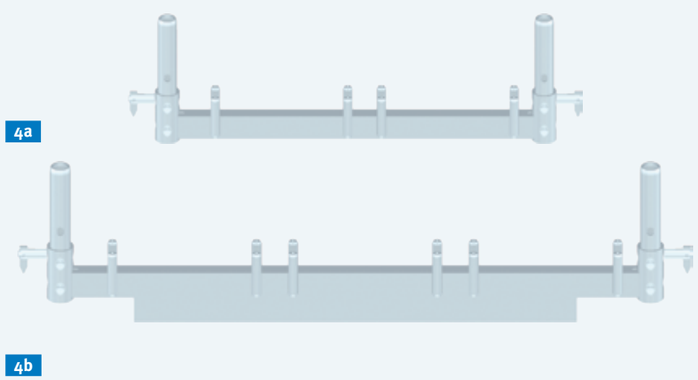

FIG.	DESCRIPTION		DIMENSIONS L/HxW [m]	WEIGHT approx. [kg]	ARTICLE NO.	PRICE [€]
01	**Transom member with couplers** ⊕ steel, hot-dip galvanised — with pins for fixing system-compatible decks and two halfcouplers — to form a support surface for decks at an intermediate frame height	1a wrench size 22	0.74	4.0	24 00 070	**35.80**
		1b wrench size 22	1.10	8.4	24 00 110	**51.00**
02	**Transition transom member** ⊕ steel, hot-dip galvanised — transition from scaffold width 1.10 m to 0.74 m, for example in the case of façade projections — to be put onto the 1.10 m assembly frame		1.10	6.0	24 04 111	**35.90**
03	**Platform transom member** ⊕ steel, hot-dip galvanised — with pins for fixing system-compatible decks and two halfcouplers — to form flat surfaces between assembly frames	3a wrench size 22	0.74	4.3	24 01 070	**44.80**
		3b wrench size 22	1.10	5.0	24 01 110	**58.00**
04	**Suspended transom member** ⊕ steel, hot-dip galvanised — with pins for fixing system-compatible decks and two tilting pins for fixing diagonal braces — to erect the bottom-most platform of suspended scaffolds and for creating projections — Static proof is required in each individual case!	4a	0.74	6.5	24 02 070	**49.80**
		4b	1.10	10.9	24 02 110	**62.90**

APPLICATION EXAMPLE
02 TRANSITION TRANSOM MEMBER

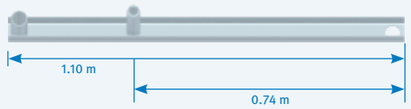

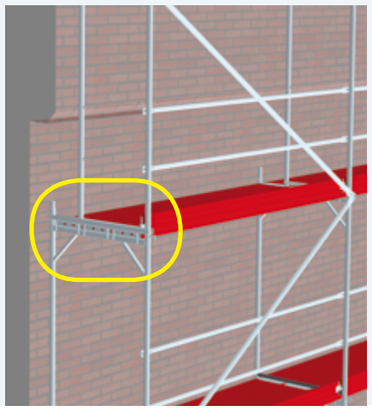

APPLICATION EXAMPLE
4a SUSPENDED TRANSOM MEMBER

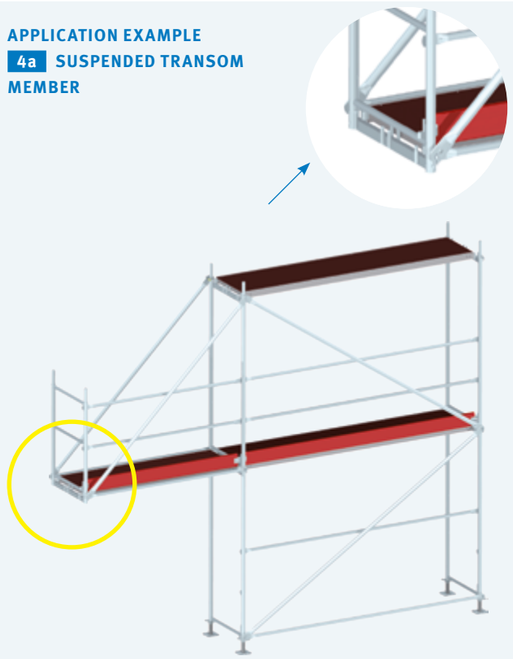

ANCHORING

NEW

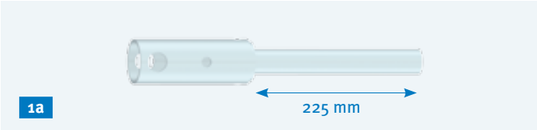

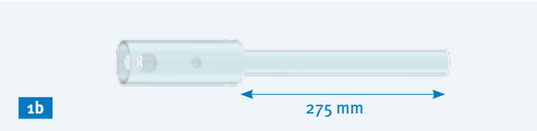

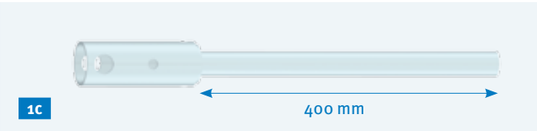

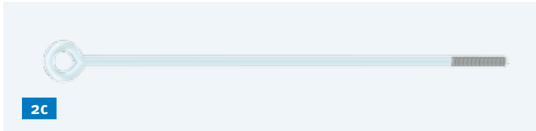

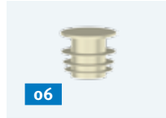

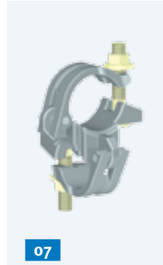

APPLICATION EXAMPLE

1a ANCHOR SLEEVE with
05 HINGED PIN

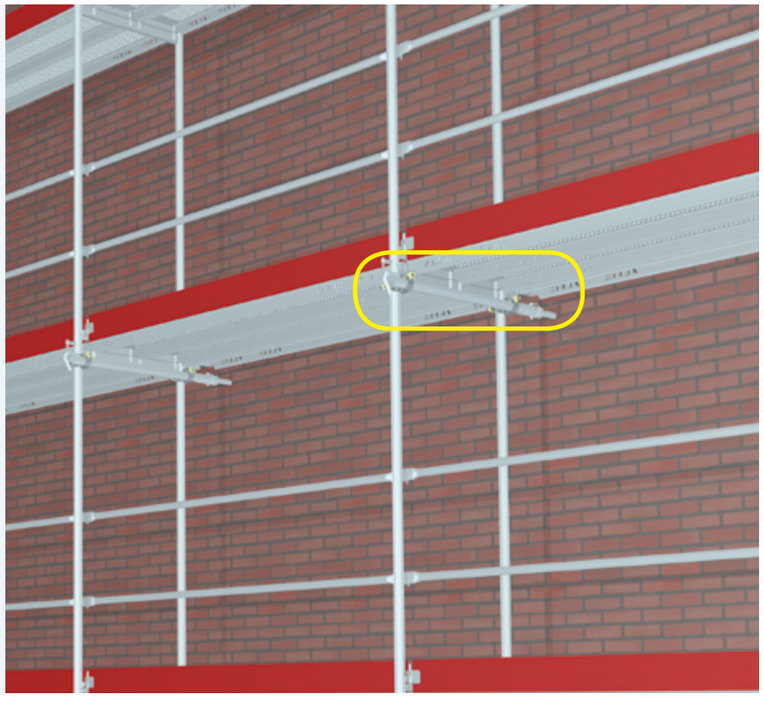

FIG.	DESCRIPTION		LENGHT [m]	WEIGHT approx. [kg]	ARTICLE NO.	PRICE [€]
01	**Anchor sleeve** ⊕ steel tube Ø 57 / 32 mm, hot-dip galvanised — for anchoring the façade scaffoldings onto buildings on which EIFS is to be or has already been installed — anchoring, as a rule, is necessary only on every fourth or fifth anchoring point — can be completely removed when dismantling and is therefore suitable for reinstallation several times — if sleeve tubing is used, the remaining opening after removing the anchor sleeve must be sealed twice using an EIFS NEOPOR®32 insulation as well as a lamellar plug — for insulation thicknesses of up to 160 mm and when using reducing standard couplers, an additional widening of decks is not required	1a 300 EIFS thickness of up to 220 mm		1.8	13 60 300	**33.50**
		1b 350 EIFS thickness of up to 270 mm		2.0	13 60 350	**36.90**
		1c 475 EIFS thickness of up to 395 mm		2.8	13 60 475	**41.20**
02	**Eyebolt** steel, zinc-plated Ø 12 mm — inside eye diameter 25 mm — wood thread — for dowel Ø 14 mm	2a 300		0.3	37 02 300	**2.50**
		2b 350		0.4	37 02 350	**2.75**
		2c 500		0.6	37 02 500	**3.95**
03	**Sleeve tubing** plastic, black		25	3.6	13 60 025	**101.05**
04	**EIFS insulation plug NEOPOR® 32** ø 32 mm, 220 mm				13 60 002	**0.60**
05	**Hinged pin** ⊕ steel, zinc-plated, 12 x 70 mm with snap-in locking mechanism			0.1	13 60 000	**2.15**
06	**Lamellar plug** clear plastic, Ø 32 mm				13 60 001	**1.05**
07	**Reducing standard coupler** steel, zinc-plated, 60 / 48 mm, wrench size 19		1.5		13 11 419	**19.90**
08	**EIFS socket-pin** steel, hot-dip galvanised, 11 x 125 mm				12 27 001	**5.05**

Detailed information on anchor sleeve and EIFS plank 190 applications can be found in the respective Instructions for Assembly and Use. Application videos and further information at www.alfix-systems.com or at www.wdvs-anker.de

BRACKETS

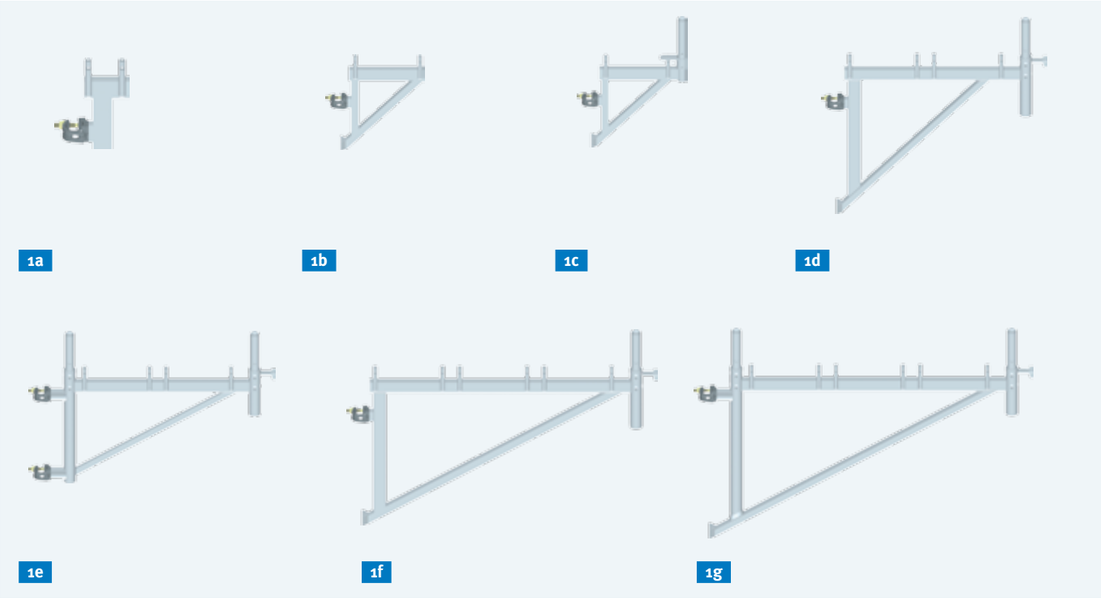

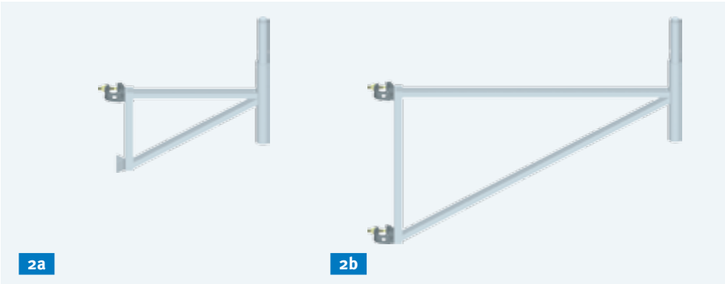

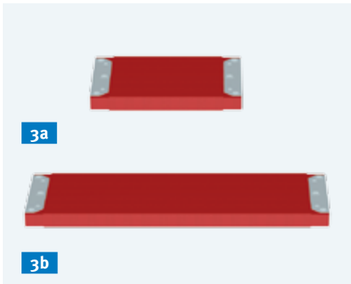

APPLICATION EXAMPLE
1e BRACKET and diagonal cross brace 1.77 m (see p. 34 - 35)

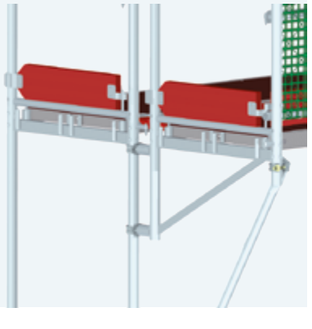

APPLICATION EXAMPLE
2a EXTENSION BRACKET,
3a SOLID WOODEN DECK and diagonal cross braces (see p. 34 - 35) for extending the scaffold bay

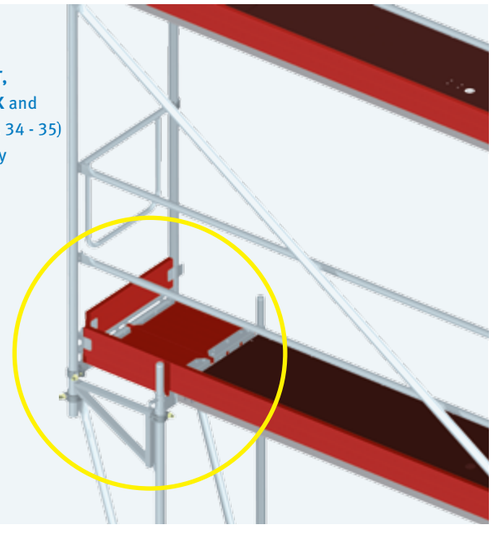

FIG.	DESCRIPTION		DIMENSIONS L/HxW [m]	WEIGHT approx. [kg]	ARTICLE NO.	PRICE [€]
01	**Bracket*** ⊕ steel, hot-dip galvanised — suitable for broadening/extension of scaffolding (internal/external) — with pins for fixing system decks — for shortening the distance to the wall (e.g. thermal insulation works) — in combination with the intermediate steel deck (see p. 10 - 11) — for broadening of scaffold layer due to structural conditions — available as bracket 0.32 m including deck retainer — with or without spigot fitting (SF)	1a without spigot fitting	0.15	2.4	20 31 016	**26.90**
		1b without spigot fitting	0.32	3.8	20 31 033	**33.00**
		1c with spigot fitting	0.32	5.3	20 31 032	**42.00**
		1d with spigot fitting	0.64	8.0	20 31 065	**59.50**
		1e with two spigot fittings	0.74	10.0	20 31 074	**70.00**
		1f with spigot fitting	0.96	12.6	20 31 096	**79.50**
		1g with two spigot fittings	1.10	14.5	20 31 110	**88.40**
02	**Extension bracket** ⊕ steel, hot-dip galvanised — for extending or shortening the scaffolding bay according to the grid spacing by 0.50 or 1.00 m increments — For receiving the 0.50 m or 1.00 m solid wooden decks, the use of the transom member (see p. 16 - 17) is required.	2a with spigot fitting	0.50	5.0	20 49 050	**50.00**
		2b with spigot fitting	1.00	8.0	20 49 100	**75.95**
03	**Wooden deck** ⊕ for extension bracket See page 10 - 11 for prices and details.	3a	0.50 × 0.32	4.5	22 31 050	**36.30**
		3b	1.00 × 0.32	8.2	22 31 100	**42.30**

* For detailed information on the intended use of the individual brackets (0.32 m to 0.74 m), please refer to the UNIFIX Instructions for Assembly and Use.

APPLICATION EXAMPLE
2a EXTENSION BRACKET AND TRANSOM MEMBER 0.74 m FOR SHORTENING THE SCAFFOLD BAY

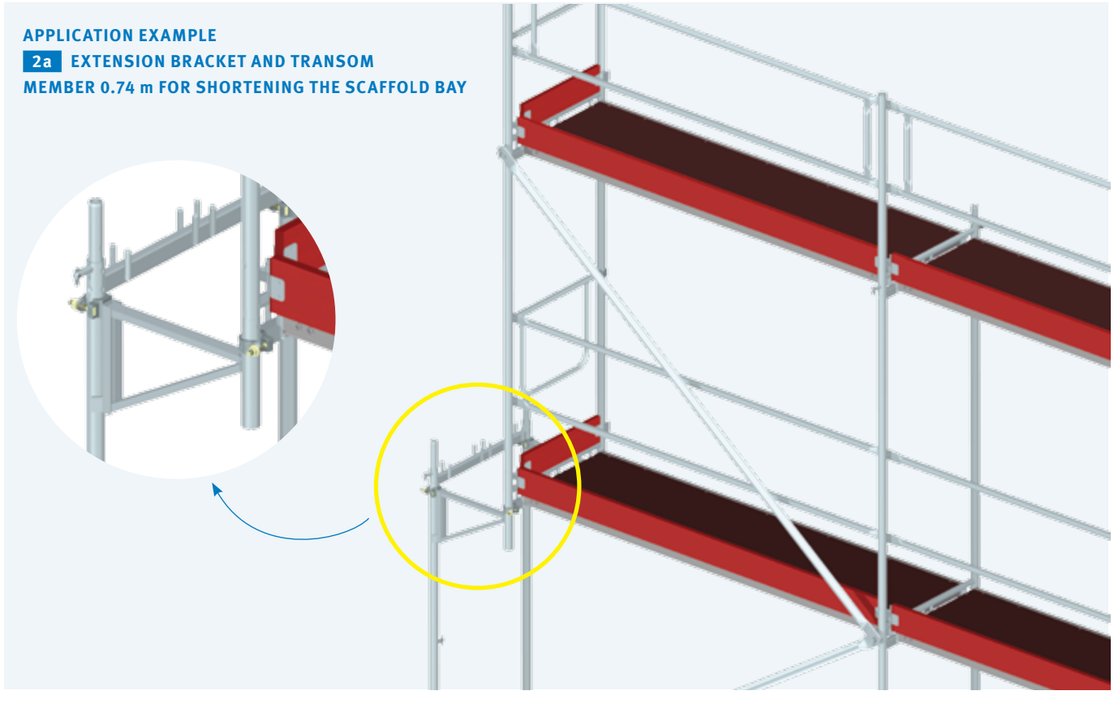

BRACKETS

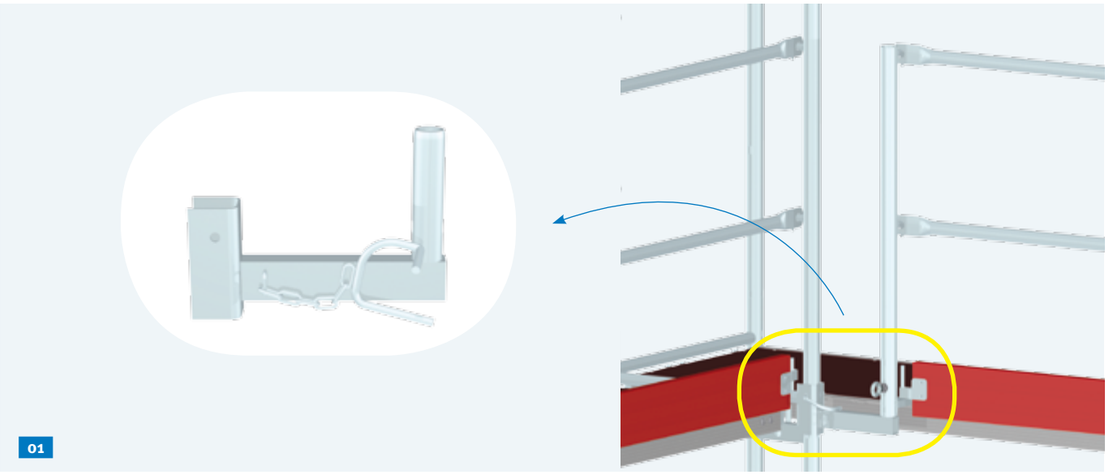

01

FIG.	DESCRIPTION		DIMENSIONS L/HxW [m]	WEIGHT approx. [kg]	ARTICLE NO.	PRICE [€]
01	**Inner corner bracket** ⊕ steel, hot-dip galvanised — with locking clip (special design) — for barrier-free access to inner corners of façade scaffolding — facilitates the use of system-compatible components for side protection instead of using tube coupling devices		0.25	1.9	20 49 025	**28.15**
02	**Diagonal cross brace** ⊕ steel tube ø 42.4 mm, hot-dip galvanised — to support the bracket for roof safety scaffolding applications or — for fulfilling necessary static requirements, e.g. for bracing the assembly frames in a transverse direction	2a for bracket 0.64 m / 0.74 m	1.77	4.8	11 28 719	**37.70**
		2b for bracket 0.96 m / 1.10 m	1.95	5.2	11 28 119	**39.60**

APPLICATION EXAMPLE
2a DIAGONAL CROSS BRACE 1.77 m with extension bracket 0.50 m
(see p. 32 - 33)

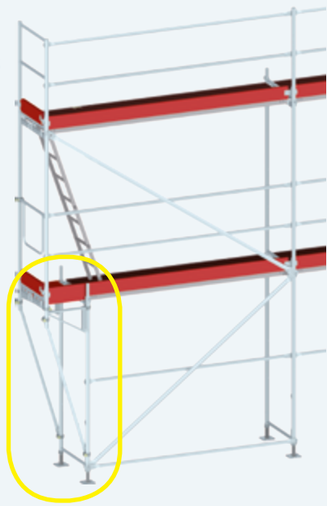

APPLICATION EXAMPLE
2b DIAGONAL CROSS BRACE 1.95 m

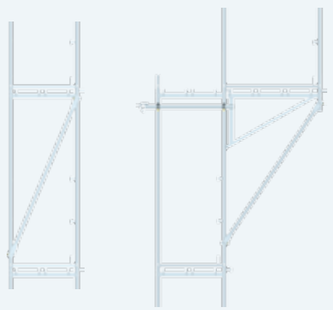

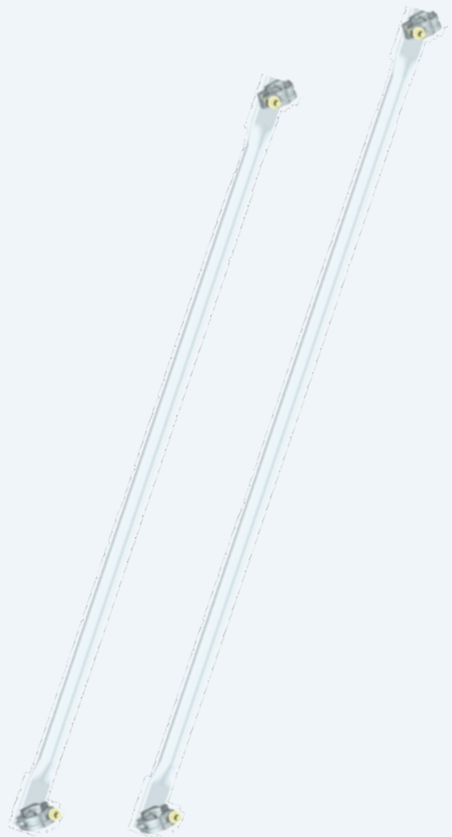

2a 2b

APPLICATION EXAMPLE
01 INNER CORNER BRACKET

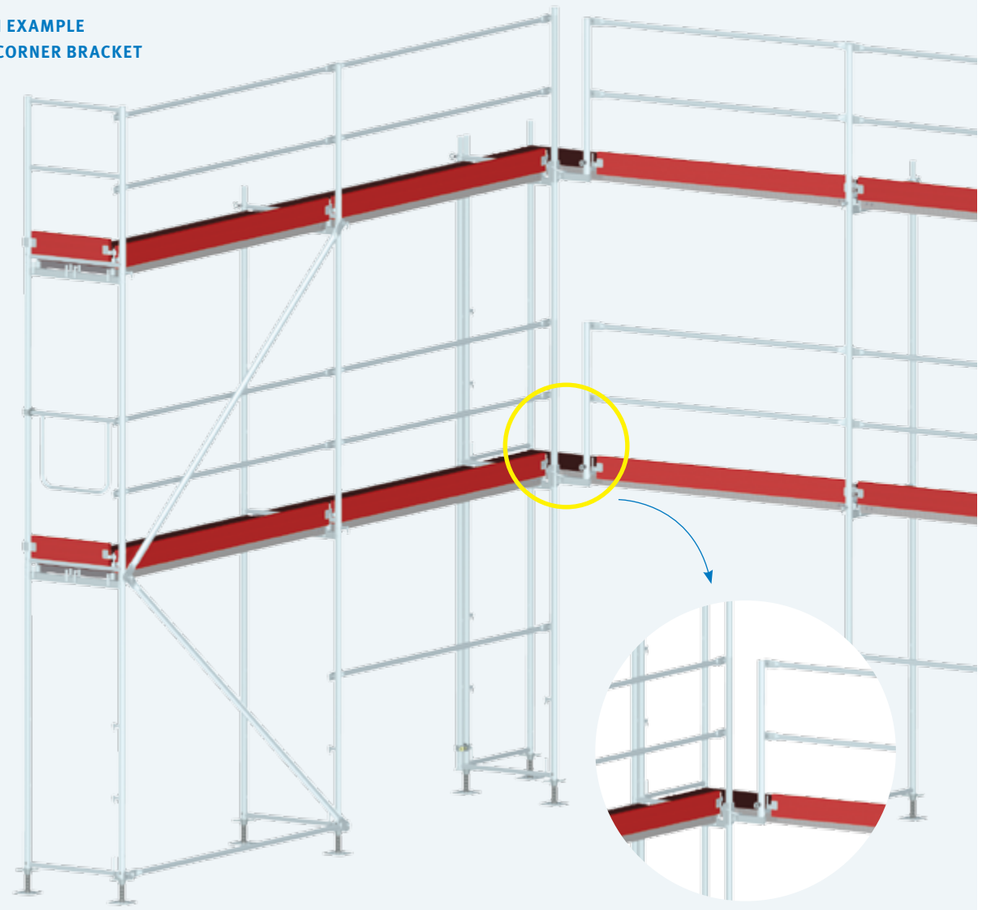

LATTICE GIRDERS

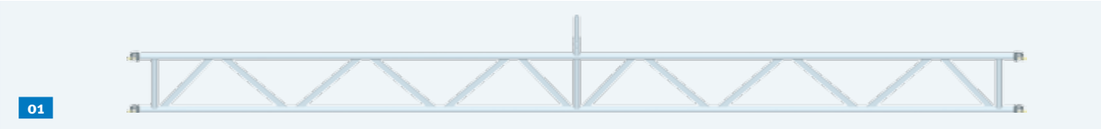

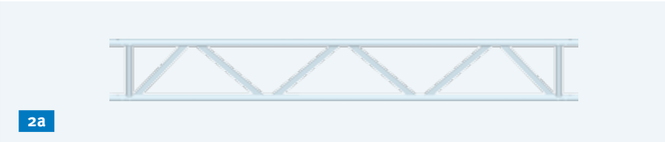

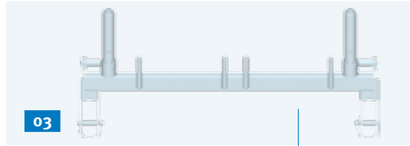

APPLICATION EXAMPLE
04 SUSPENSION for 02 LATTICE GIRDER

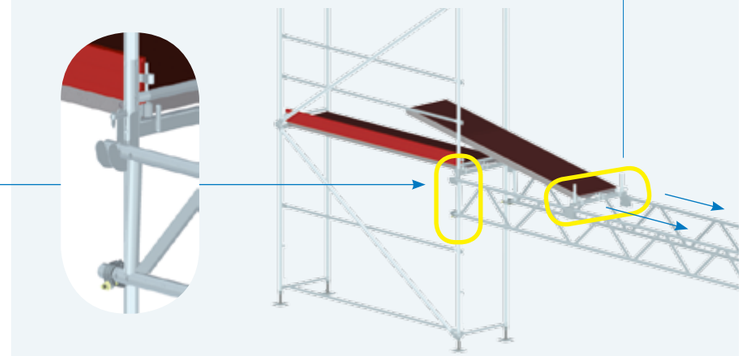

APPLICATION EXAMPLE
02 LATTICE GIRDER

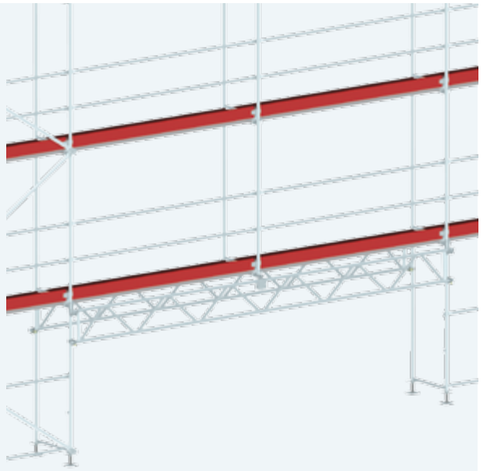

APPLICATION EXAMPLE
07 WALL MOUNTING for
02 LATTICE GIRDER

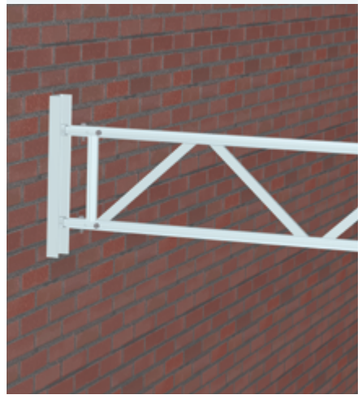

FIG.	DESCRIPTION		DIMENSIONS L/HxW [m]	WEIGHT approx. [kg]	ARTICLE NO.	PRICE [€]
01	**Bridging girder, steel** steel tube ø 48.3 mm, hot-dip galvanised — with four welded-on halfcouplers and a welded-on spigot fitting to receive the assembly frames for continued erection acc. to the grid spacing		5.00 × 0.45	48.2	23 77 500	**270.50**
			6.00 × 0.45	56.8	23 77 600	**302.50**
			7.50 × 0.45	76.5	23 77 750	**375.00**
02	**Lattice girder** ⊕ — suitable for façade scaffolding installations if there is a structural necessity (passages, etc.) — The load capacity depends on material and bridging length! / For load capacities see Technical Approval or Instructions for Assembly and Use.	2a steel steel tube ø 48.3 mm, hot-dip galvanised	3.10 × 0.45	30.9	23 75 310	**139.00**
			4.10 × 0.45	40.1	23 75 410	**175.00**
			5.10 × 0.45	49.4	23 75 510	**209.00**
			6.10 × 0.45	58.6	23 75 610	**235.00**
			7.60 × 0.45	73.0	23 75 760	**350.00**
		2b aluminium aluminium tube ø 48.3 mm (without fig.)	3.10 × 0.45	12.5	23 70 310	**155.00**
			4.10 × 0.45	16.3	23 70 410	**199.00**
			5.10 × 0.45	19.9	23 70 510	**230.00**
			6.10 × 0.45	23.6	23 70 610	**279.00**
			8.10 × 0.45	30.9	23 70 800	**369.00**
03	**Lattice girder cross brace** ⊕ steel, hot-dip galvanised — incl. two hinged pins — for continued erection on lattice girders — suitable for bridging within the façade scaffolding — suitable for lattice girders as an alternative to screwed-in half-frames		0.74	8.4	23 91 073	**102.50**
			1.10	13.1	23 91 109	**135.75**
04	**Lattice girder suspension** ⊕ steel, hot-dip galvanised — suitable to fasten lattice girders onto assembly frames for standard bridging arrangements			1.0	23 90 000	**31.55**
05	**Spigot fitting for lattice girder** steel, hot-dip galvanised, with four screws M 14 x 60 mm		0.41	1.5	13 88 030	**20.30**
06	**Attachment piece for lattice girder** steel, hot-dip galvanised, with borehole for locking clip		0.30	2.5	13 75 000	**26.30**
07	**Wall mounting for lattice girder** ⊕ steel, hot-dip galvanised, version with U-profile 120 mm — for end side mounting of lattice girders on the building, particularly for special constructive solutions — fastening dependent upon anchoring and load / in individual cases subject to verification		0.70	6.8	13 90 001	**69.00**
08	**Supporting tube** steel, hot-dip galvanised — for screwing onto the lattice girder — to receive system-compatible decks for creating surface scaffoldings	2 planks/decks	0.65	4.6	23 93 065	**33.80**
		3 planks/decks	1.00	5.7	23 93 100	**49.00**
		4 planks/decks	1.30	7.9	23 93 130	**63.50**
		5 planks/decks	1.60	9.4	23 93 160	**78.00**
		6 planks/decks	1.95	10.9	23 93 195	**95.00**
		8 planks/decks	2.55	12.5	23 93 255	**139.65**

ALUMINIUM BRIDGING DECKS

01

GUARDRAIL DIMENSIONS FOR ALUMINIUM BRIDGING DECKS	
Bridging decks [m]	**Guardrail dimensions** [m]
4.00	2 × 1.50
5.00	2 × 2.00
6.00	2 × 2.50
7.00	2 × 3.00
8.00	1 × 2.00 2 × 2.50
9.00	1 × 3.00 2 × 2.50
10.00	3 × 3.00

02

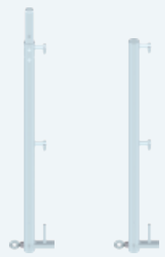

3a 3b

05

06

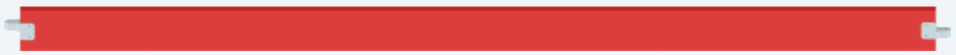

07

APPLICATION EXAMPLE

01 ALUMINIUM BRIDGING DECK and
08 CLAMPING COUPLER

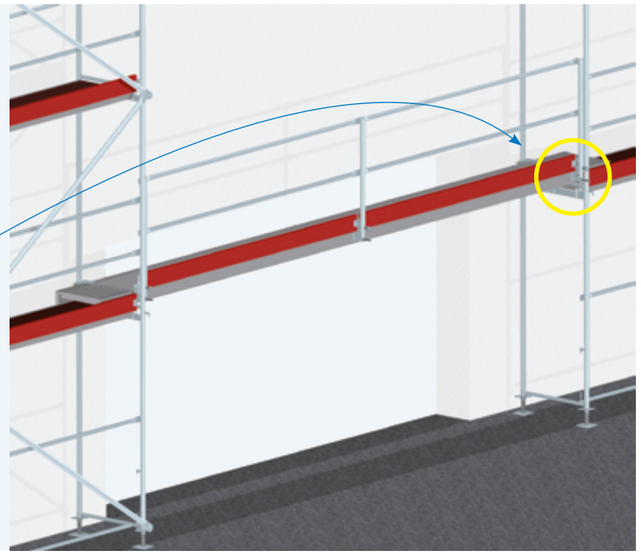

FIG.	DESCRIPTION		DIMENSIONS L/HxW [m]	WEIGHT approx. [kg]	ARTICLE NO.	PRICE [€]
01	**Aluminium bridging deck** ⊕	1a height 0.12 m	4.00	23.3	32 00 400	**493.70**
	— 150 kg single load or 100 kg/m² area-related useful load, suitable for all scaffolding systems		5.00	28.5	32 00 500	**671.70**
	— assembly of side protection using a threaded rod and a guardrail holder		6.00	33.8	32 00 600	**775.00**
			7.00	39.0	32 00 700	**892.60**
	— anti-tilt device for securing at the assembly frame, boreholes for receiving the guardrail holders, according to grid spacing	1b height 0.14 m (without fig.)	8.00	68.3	32 00 800	**1.102.60**
			9.00	76.4	32 00 900	**1.228.40**
	— width 0.53 m		10.00	84.4	32 00 001	**1.348.10**
02	**Guardrail holder** ⊕ steel, hot-dip galvanised — for receiving both single guardrail posts and side protection elements of façade scaffolding		0.25	1.8	32 01 002	**16.80**
03	**Guardrail post, single** ⊕ steel tube ø 48.3 mm, hot-dip galvanised	3a with spigot fitting and short deck retainer	1.00	4.5	20 65 101L	**32.50**
	See page 20 - 21 for prices and details.	3b without spigot fitting, with short deck retainer	1.00	3.6	20 65 102L	**28.20**
04	**Threaded rod** ⊕ steel ø 15.1 mm, hot-dip galvanised (without fig.) — for fastening guardrail holders	for 1 bridging deck	0.90	1.4	32 02 001	**10.70**
		for 2 bridging decks	1.44	2.2	32 02 002	**15.75**
		for 3 bridging decks	1.97	3.0	32 02 003	**20.25**
		for 4 bridging decks	2.50	3.8	32 02 004	**25.60**
05	**Flanged wing nut 8T** ⊕ steel, zinc-plated, ø 70 mm, for threaded rod ø 15.1 mm			0.5	32 03 000	**5.90**
06	**Rear guardrail** steel tube ø 38 mm, hot-dip galvanised		1.50	2.5	20 60 150	**14.50**
			2.00	3.4	20 60 200	**15.00**
	— mounting using tilting pins		2.50	4.1	20 60 250	**16.00**
	See page 18 - 19 for prices and details.		3.00	6.1	20 60 300	**17.00**
07	**Toeboard, wood** ⊕		1.50	4.0	22 50 150	**14.20**
	— height 15 cm		2.00	5.0	22 50 200	**15.00**
	— framed with fittings		2.50	6.5	22 50 250	**16.50**
	See page 22 - 23 for prices and details.		3.00	7.5	22 50 300	**17.80**
08	**Clamping coupler, universal design** ⊕ steel, hot-dip galvanised		0.20	1.1	13 17 019	**20.70**

APPLICATION EXAMPLE

01 ALUMINIUM BRIDGING DECK
02 GUARDRAIL HOLDER
03 GUARDRAIL POST, SINGLE
04 THREADED ROD
05 FLANGED WING NUT 8T
07 TOEBOARD, WOOD

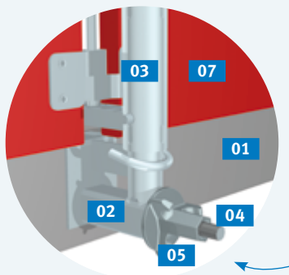

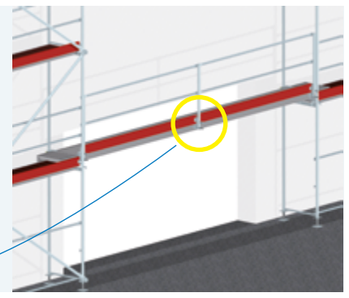

COUPLERS

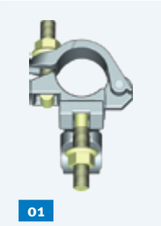
01

02

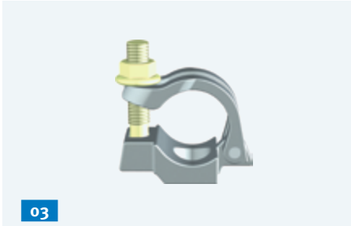
03

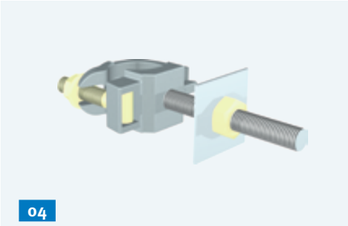
04

05

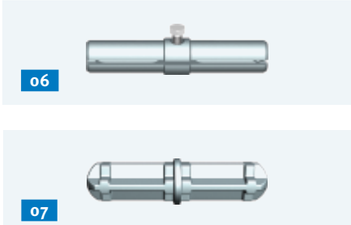
06

07

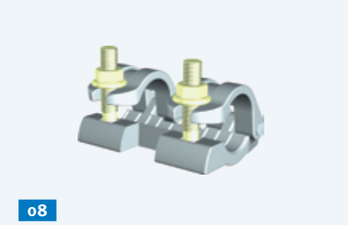
08

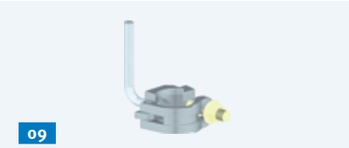
09

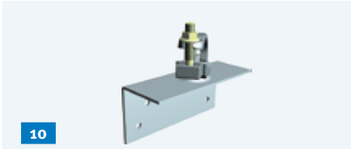
10

11

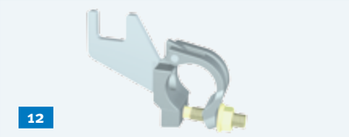
12

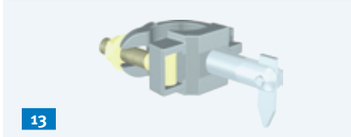
13

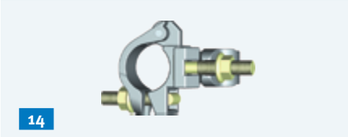
14

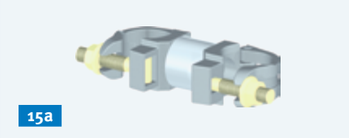
15a

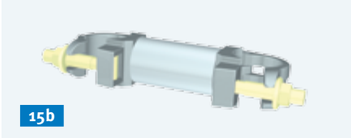
15b

APPLICATION EXAMPLE
05 CLAW COUPLER, always fitted in pairs

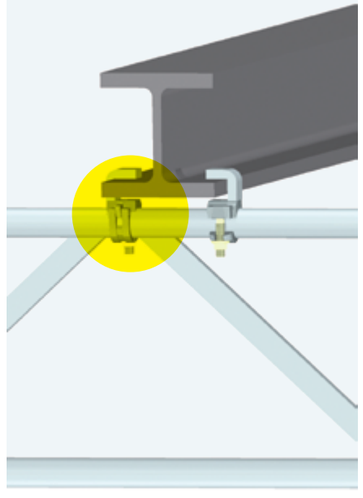

APPLICATION EXAMPLE
11 HALFCOUPLER WITH HOOK FOR V-ANCHOR, 09 TOEBOARD COUPLER

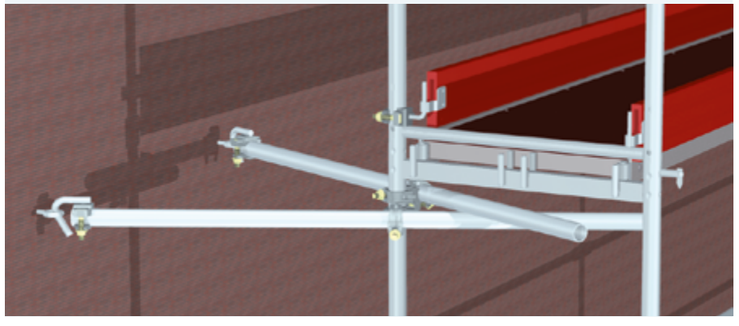

FIG.	DESCRIPTION		DIMENSIONS ø / ø [mm]	WEIGHT approx. [kg]	ARTICLE NO.	PRICE [€]
01	**Standard coupler** with collar nuts, for tubes ø 48.3 mm	wrench size 22	48 / 48	1.0	13 01 022	**6.00**
02	**Swivel coupler** with collar nuts, for tubes ø 48.3 mm	wrench size 22	48 / 48	1.0	13 03 022	**6.50**
03	**Halfcoupler**	wrench size 22	48 / –	0.6	13 02 022	**8.20**
04	**Combination coupler** Threaded bolt M16 x 120 mm, incl. coupling plate 60 x 60 and nut M16 DIN 934	wrench size 22	48 / –	0.5	13 04 022	**14.90**
05	**Claw coupler** ⊕ clear width 35 mm	wrench size 22	48 / –	0.9	13 10 022	**14.00**
06	**Spigot fitting (universal design), clampable, 0.24 m** consisting of 2 half-shells and a screw — for connecting tubes subject to impact stress — spread apart using the screw			1.7	13 08 001	**10.70**
07	**Spigot fitting** for tension coupler			1.0	13 08 000	**5.20**
08	**Tension coupler** with collar nuts, for tubes ø 48.3 mm	wrench size 22	48 / 48	1.4	13 07 022	**9.20**
09	**Toeboard coupler** ⊕	wrench size 22	48 / –	0.6	13 13 022	**13.60**
10	**Squared timber coupler**	wrench size 22	48 / –	1.8	33 81 022	**18.20**
11	**Halfcoupler with hook** ⊕	wrench size 22	48 / –	0.9	13 06 022	**12.50**
12	**UNIFIX anchor coupler**	wrench size 22	48 / –	0.9	13 06 222	**12.25**
13	**Tilting pin coupler**	wrench size 22	48 / –	0.6	13 05 022	**7.00**
14	**Reducing standard coupler**	wrench size 22	48 / 34	1.0	13 11 022	**15.70**
15	**Distance coupler** 15a 113 mm	wrench size 22	48 / 48	1.5	13 20 022	**18.50**
	15b 160 mm	wrench size 22	48 / 48	1.6	13 20 122	**18.50**
16	**Hexagon bolt** steel, zinc-plated, M 14 x 65 (without fig.) — to be used as fastening bolt with cap nut			0.1	14 53 000	**0.95**
17	**Hexagon cap nut** steel, zinc-plated, M14 (without fig.)			0.04	73 02 003	**1.20**
18	**T-slot bolt** M 14 × 78mm (without fig.)				14 51 000	**0.60**
19	**Collar nut** M 14 (without fig.)	wrench size 22		0.04	14 52 000	**0.60**

UNIFIX couplers for tubes of Ø 48.3 mm. Couplers are approved by the respective manufacturer and in accordance with DIN EN 74-1 .

FAÇADE SCAFFOLDING ACCESSORIES

APPLICATION EXAMPLE
01 PROTECTIVE SHELTER EXTENSION and
02 DECK RETAINER FOR PROTECTIVE SHELTER EXTENSION

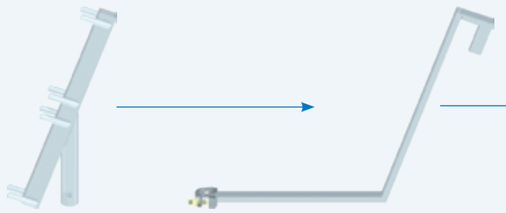

01 02

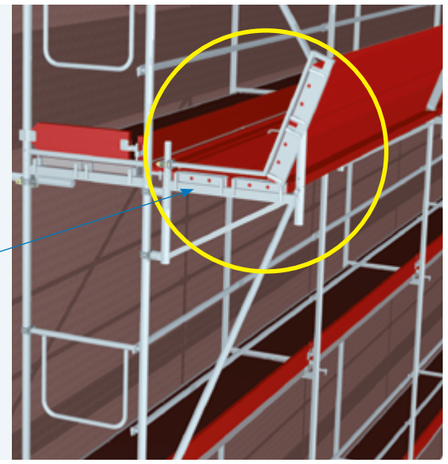

03

APPLICATION EXAMPLE
06 GROUND SPIKE

04

05

APPLICATION EXAMPLE
Locking clip for fixing the diagonal tube at various extension lengths

06

APPLICATION EXAMPLE
03 SCAFFOLD POST, TELESCOPIC

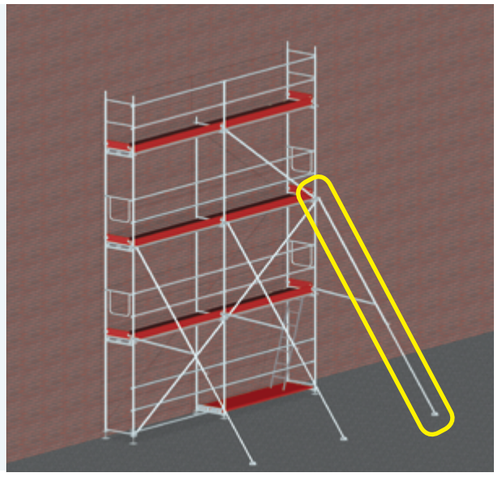

FIG.	DESCRIPTION	DIMENSIONS L/HxW [m]	WEIGHT approx. [kg]	ARTICLE NO.	PRICE [€]
01	**Protective shelter extension** ⊕ steel, hot-dip galvanised — used in combination with bracket and diagonal cross brace — usable at any height — creation of guard net system through the vertical installation of system-compatible decks For proper use see the UNIFIX Façade Scaffolding Instructions for Assembly and Use.	0.60 × 0.30	4.0	20 71 000	**29.50**
02	**Deck retainer for protective shelter extension** steel, hot-dip galvanised	0.66 × 0.89	3.1	20 71 002	**39.50**
03	**Scaffold post, telescopic** ⊕ steel, hot-dip galvanised — transport length 3.20 m, extension length 3.00 m - 5.00 m / support of free standing scaffolds up to 6.20 m standing height — integrated bracing for a safe connection to the scaffolding, fastening of foot plate with two ground spikes each — locking clip for fixing the diagonal tube at various extension lengths		28.0	13 63 500	**162.80**
04	**Scaffold tube, steel** ø 48.3 x 3.25 mm, up to 6 m, hot-dip galvanised	1.00	3.5	13 51 100	**10.50**
		2.00	7.0	13 51 200	**19.80**
		3.00	10.5	13 51 300	**29.70**
		4.00	14.0	13 51 400	**40.10**
		5.00	17.5	13 51 500	**48.30**
		6.00	21.0	13 51 600	**56.20**
05	**Scaffold tube, aluminium** ø 48.3 x 4.05 mm, up to 6 m	1.00	1.5	13 40 100	**12.90**
		2.00	3.0	13 40 200	**25.80**
		3.00	4.5	13 40 300	**38.70**
		4.00	6.0	13 40 400	**51.80**
		5.00	7.5	13 40 500	**64.50**
		6.00	9.0	13 40 600	**74.70**
06	**Ground spike** ⊕ steel Ø 25 mm, non-galvanised	0.48	2.0	61 00 000	**12.70**

NEW CATALOGUE AVAILABLE!
ALFIX VARIO WEATHER PROTECTION ROOF

ORDER NOW
https://www.alfix-systems.com/de/downloads/prospekte/

FAÇADE SCAFFOLDING ACCESSORIES

01

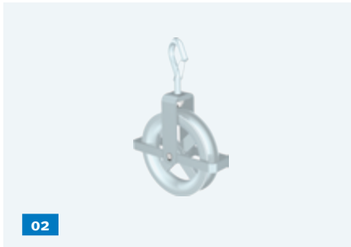

02

03

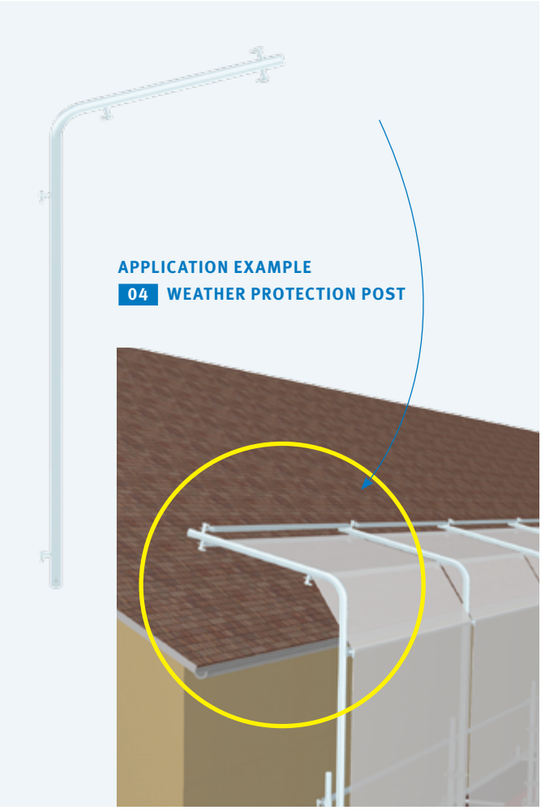

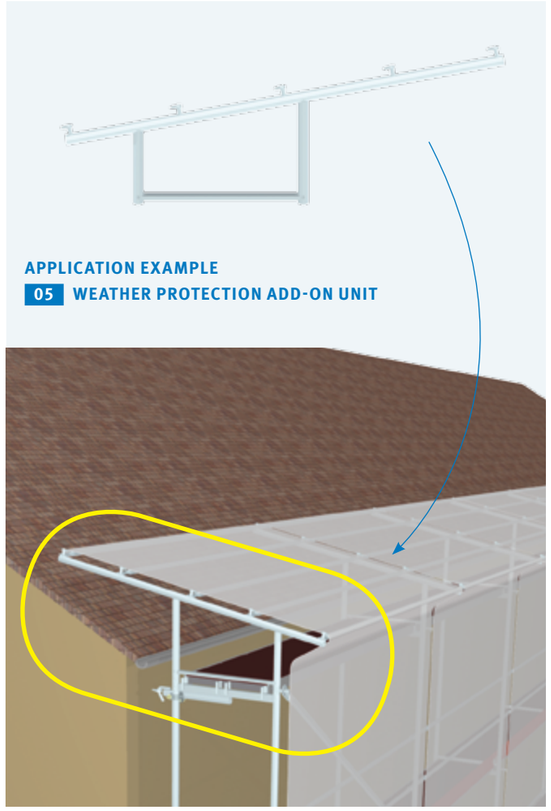

RECESS BRACKET HOLDER

Per storey, two recess bracket holders are placed onto the decks and fixed by tensioning bolts. The holders fit onto every scaffold deck. Their arrangement must ensure that the recess can be secured by a grid-like decking and that the lateral recess gap does not exceed 30 cm according to the scaffolding regulations. Tubes are vertically fixed to the halfcouplers, which are integrated into the holder, across two or more (depending on recess brackets) storeys. The tubes serve for fixing the brackets at the required height.

06

07

08

FIG.	DESCRIPTION	DIMENSIONS L/HxW [m]	WEIGHT approx. [kg]	ARTICLE NO.	PRICE [€]
01	**Bracket for pulley** steel, hot-dip galvanised with halfcoupler and welded-on fixture for pulley	0.74	6.7	10 49 073	**46.75**
02	**Pulley** steel, hot-dip galvanised — with crossed bow, turnable load hook and safety catch or carabiner / suitable for ropes up to ø 28 mm — permissible tensile load 200 kg, pulley diameter 190 mm	ø 190 mm	2.3	37 83 000	**68.90**
03	**Recess bracket starting piece** steel, hot-dip galvanised	0.35	1.7	14 40 000	**5.90**
04	**Weather protection post** ⊕ steel, hot-dip galvanised — attachable component for light weather protection on façade scaffoldings — weather protection posts are connected using the rear guardrail	2.00	13.0	20 71 200	**82.50**
05	**Weather protection add-on unit** ⊕ steel, hot-dip galvanised — to be attached on assembly frames of system width 0.74 m / fastening of scaffolding protection tarpaulins by means of cable ties — weather protection add-on units are connected to each other using the rear guardrail — roofing element for receiving scaffolding tarpaulins (see Accessories Catalogue)	2.00	14.9	20 71 201	**96.70**
06	**Recess bracket holder** ⊕ steel, hot-dip galvanised — with integrated halfcoupler, for all scaffolding systems up to widths of 0.65 m and 1.00 m	0.70	2.3	14 51 060	**30.60**
		1.00	2.9	14 51 100	**36.95**
07	**Locking clip** steel, hot-dip galvanised		0.13	14 50 000	**1.00**
08	**Hinged pin** steel, zinc-plated	8 × 60	0.15	30 06 250	**1.15**

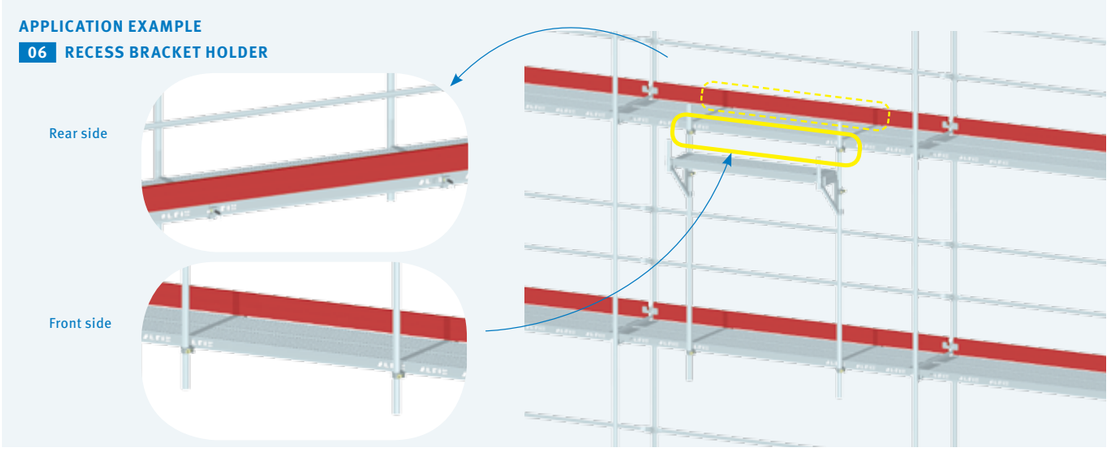

FALL PROTECTION EQUIPMENT

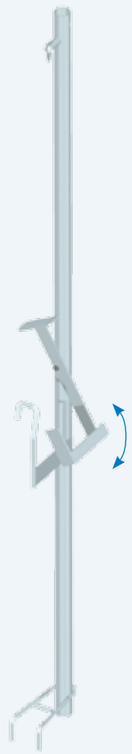

1a

1b

APPLICATION EXAMPLE

1a **ADVANCED GUARDRAIL POST** with convenient foot release

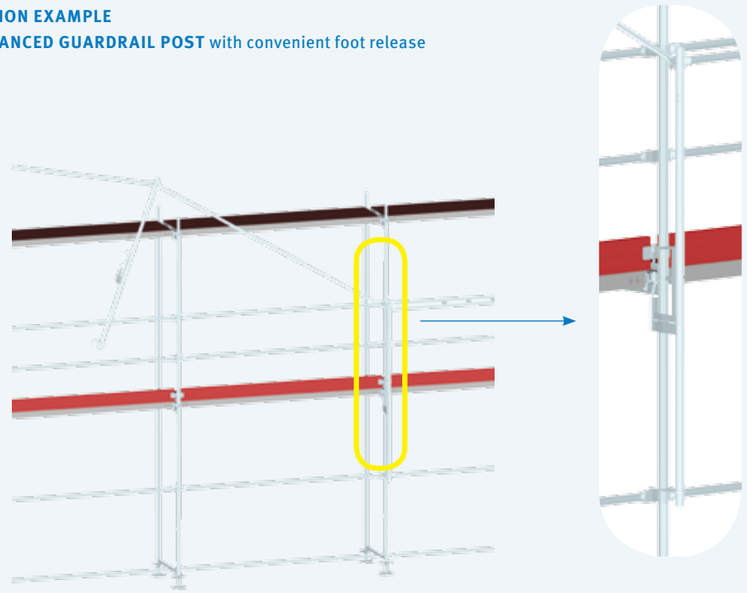

2b

03

04

FIG.	DESCRIPTION	DIMENSIONS L/HxW [m]	WEIGHT approx. [kg]	ARTICLE NO.	PRICE [€]
01	**Advanced side protection** — consisting of an advanced guardrail post, an advanced end guardrail and a telescopic guardrail — safety device for scaffold assembly/disassembly — suitable for all compatible scaffolding systems — for proper usage, see Instructions for Assembly and Use or the provisions of the employer's liability insurance association for construction sites (BG Bau)				
1a	Advanced guardrail post steel, hot-dip galvanised	2.00	6.8	24 43 100	**46.35** Special net price
1b	Advanced telescopic guardrail aluminium and steel, hot-dip galvanised — incl. hinged pin with snap-in locking mechanism to ensure transportation safety	2.50 – 3.07	7.9	14 43 200	**52.60** Special net price
02	**Safety helmet with chin straps**				
2a	white (without fig.)			37 50 018	**71.60**
2b	yellow			37 50 024	**71.60**
03	**Personal fall protection equipment (PPE)** EN 354 / 355 / 361 / 363, connecting means sharp-edge resistant — special carabiners for scaffolding applications — delivered in a PVC equipment bag — Revolution R2 Scaff belt, 2.50 m, Manyard Edge lanyard — with Pivot Link™ connection at waist level for a secure connection of accessories, e.g. 04 tool bag			37 67 009	**299.15** Special net price
04	**Tool bag for scaffolding ratchets** — with Pivot Link™ connection at waist level for a secure connection of accessories, e.g. tool bag			37 50 017	**16.60**

ONLINE CATALOGUE
https://www.alfix-systems.com/de/shop

SCAFFOLDING EXAMPLES

ALFIX façade scaffolding 0.74 m according to the price list / Bay length of scaffold: 3.00 m

3.00 m	SCAFFOLD LENGTH x WORKING HEIGHT (m)		12.00 × 8.20	12.00 × 10.20	15.00 × 10.20	30.00 × 10.20	51.00 × 10.20	99.00 × 10.20
	SCAFFOLD SURFACE (m²)		**98**	**122**	**153**	**306**	**520**	**1010**
BASIC EQUIPMENT	Assembly frame 2.00 x 0.74 m	20 10 200L	15	20	24	44	72	136
	Wooden deck 3.00 x 0.32 m	22 31 300	24	32	40	80	136	264
	Diagonal brace 3.60 m	21 01 361	3	4	8	12	20	32
	Rear guardrail 3.00 m	20 60 300	28	36	45	90	153	297
	Toeboard, wood, 3.00 m	22 50 300	12	16	20	40	68	132
	End toeboard, wood, 0.74 m	22 51 070	6	8	8	8	8	8
	End guardrail, double, 0.74 m	20 62 070	4	6	6	6	6	6
	Guardrail post 0.74 m	20 64 070L	w3	3	4	9	16	32
	End guardrail frame 0.74 m	20 67 070L	2	2	2	2	2	2
	Lower diagonal brace fixture	21 28 000	1	1	2	3	5	8
	Base jack 0.40 m	11 51 040	10	10	12	22	36	68
	TOTAL PRICE (€)		**3,953.10**	**5,146.30**	**6,354.40**	**11,898.90**	**19,735.60**	**37,453.20**
	PRICE PER m² (€)		**40.34**	**42.18**	**41.53**	**38.89**	**37.95**	**37.08**
	WEIGHT (kg)		**1,212.2**	**1,587.2**	**1,985.5**	**3,795.0**	**6,355.6**	**12,187.0**
SCAFFOLD ANCHORING	Spacing tube 0.40 m	13 61 040	5	7	8	13	20	36
	Standard coupler	13 01 022	5	7	8	13	20	36
	Expansion anchor 70 mm	37 00 000	5	7	8	13	20	36
	Eyebolt 12 x 120 mm	37 02 120	5	7	8	13	20	36
	Cap	37 01 001	5	7	8	13	20	36
	TOTAL PRICE (€)		**86.00**	**120.40**	**137.60**	**223.60**	**344.00**	**619.20**
	WEIGHT (kg)		**16.0**	**22.4**	**25.6**	**41.6**	**64.0**	**115.2**
SCAFFOLD ACCESS	Hatch-type access deck with ladder SPP 3.00 x 0.64 m	22 04 300	3	4	4	4	4	4
	SURCHARGE (€)		**592.50**	**790.00**	**790.00**	**790.00**	**790.00**	**790.00**
	SHORT WEIGHT (kg)		**61.2**	**81.6**	**81.6**	**81.6**	**81.6**	**81.6**
ALTERNATIVE SCAFFOLD DECKS	Aluminium frame platform 3.00 x 0.64 m	22 02 300	12	16	20	40	68	132
	SURCHARGE (€)		**642.00**	**856.00**	**1,070.00**	**2,140.00**	**3,638.00**	**7,062.00**
	SHORT WEIGHT (kg)		**301.2**	**401.6**	**502.0**	**1,004.0**	**1,706.8**	**3,313.2**
	Steel deck 3.00 x 0.32 m	22 21 300	24	32	40	80	136	264
	SURCHARGE (€)		**480.00**	**640.00**	**800.00**	**1,600.00**	**2,720.00**	**5,280.00**
	SHORT WEIGHT (kg)		**60.0**	**80.0**	**100.0**	**200.0**	**340.0**	**660.0**
ASSEMBLY FRAME, ALUMINIUM	Assembly frame, aluminium, 2.00 x 0.74 m	20 00 200	15	20	24	44	72	136
	SURCHARGE (€)		**517.50**	**690.00**	**828.00**	**1,518.00**	**2,484.00**	**4,692.00**
	SHORT WEIGHT (kg)		**139.5**	**186.0**	**223.2**	**409.2**	**669.6**	**1.264.8**

ALFIX façade scaffolding 0.74 m according to the price list / Bay length of scaffold: 2.50 m

2.50 m	SCAFFOLD LENGTH x WORKING HEIGHT (m)		12.50 × 8.20	12.50 × 10.20	15.00 × 10.20	30.00 × 10.20	50.00 × 10.20	100.00 × 10.20
	SCAFFOLD SURFACE (m²)		**103**	**128**	**153**	**306**	**510**	**1020**
BASIC EQUIPMENT	Assembly frame 2.00 × 0.74 m	20 10 200L	18	24	28	52	84	164
	Wooden deck 2.50 × 0.32 m	22 31 250	30	40	48	96	160	320
	Diagonal brace 3.20 m	21 01 320	6	8	8	12	20	40
	Rear guardrail 2.50 m	20 60 250	35	45	54	108	180	360
	Toeboard, wood, 2.50 m	22 50 250	15	20	24	48	80	160
	End toeboard, wood, 0.74 m	22 51 070	6	8	8	8	8	8
	End guardrail, double, 0.74 m	20 62 070	4	6	6	6	6	6
	Guardrail post 0.74 m	20 64 070L	4	4	5	11	19	39
	End guardrail frame 0.74 m	20 67 070L	2	2	2	2	2	2
	Lower diagonal brace fixture	21 28 000	2	2	2	3	5	10
	Base jack 0.40 m	11 51 040	12	12	14	26	42	82
	TOTAL PRICE (€)		**4,612.90**	**5,999.40**	**7,016.50**	**13,233.10**	**21,597.90**	**42,509.90**
	PRICE PER m² (€)		**44.79**	**46.87**	**45.86**	**43.25**	**42.35**	**41.68**
	WEIGHT (kg)		**1,318.7**	**1,726.4**	**2,029.3**	**3,887.4**	**6,392.0**	**11,887.5**
SCAFFOLD ANCHORING	Spacing tube 0.40 m	13 61 040	6	8	9	13	23	43
	Standard coupler	13 01 022	6	8	9	13	23	43
	Expansion anchor 70 mm	37 00 000	6	8	9	13	23	43
	Eyebolt 12 x 120 mm	37 02 120	6	8	9	13	23	43
	Cap	37 01 001	6	8	9	13	23	43
	TOTAL PRICE (€)		**103.20**	**137.60**	**154.80**	**223.60**	**395.60**	**739.60**
	WEIGHT (kg)		**19.2**	**25.6**	**28.8**	**41.6**	**73.6**	**137.6**
SCAFFOLD ACCESS	Hatch-type access deck with ladder SPP 2.50 × 0.64 m	22 04 250	3	4	4	4	4	4
	SURCHARGE (€)		**512.10**	**682.80**	**682.80**	**682.80**	**682.80**	**682.80**
	SHORT WEIGHT (kg)		**48.6**	**65.2**	**65.2**	**65.2**	**65.2**	**65.2**
ALTERNATIVE SCAFFOLD DECKS	Aluminium frame platform 2.50 × 0.64 m	22 02 250	15	20	24	48	80	160
	SURCHARGE (€)		**873.00**	**1,164.00**	**1,396.80**	**2,793.60**	**4,656.00**	**9,312.00**
	SHORT WEIGHT (kg)		**313.5**	**418.0**	**501.6**	**1,003.2**	**1,672.0**	**3,344.0**
	Steel deck 2.50 × 0.32 m	22 21 250	30	40	48	96	160	320
	SURCHARGE (€)		**498.00**	**664.00**	**796.80**	**1,593.60**	**2,656.00**	**5,312.00**
	SHORT WEIGHT (kg)		**45.0**	**60.0**	**72.0**	**144.0**	**240.0**	**480.0**
ASSEMBLY FRAME, ALUMINIUM	Assembly frame, aluminium, 2.00 × 0.74 m	20 00 200	18	24	28	52	84	164
	SURCHARGE (€)		**621.00**	**828.00**	**966.00**	**1,794.00**	**2,898.00**	**5,658.00**
	SHORT WEIGHT (kg)		**167.4**	**223.2**	**260.4**	**483.6**	**781.2**	**1,525.2**

TECHNICAL DETAILS

Load classes of scaffolding decks

SCAFFOLDING DECKS

DESCRIPTION	BAY WIDTH L (m)	SAFETY AND ROOF SAFETY SCAFFOLDING APPLICATIONS	USAGE IN LOAD CLASS	
Steel deck 0.32 m	≤ 2.00	permissible	6	
	2.50	permissible	5	
	3.00	permissible	4	
	4.00	permissible	3	
Wooden deck 0.32 m	≤ 1.50	permissible	6	
	2.00	permissible	5	
	2.50	permissible	4	
	3.00	permissible	3	
Solid aluminium deck 0.32 m	≤ 2.00	permissible	6	
	2.50	permissible	5	
	3.00	permissible	4	
	4.10	–	3	
Lightweight deck 0.64 m	1.50	permissible	4	
	2.00	permissible	4	
	2.50	permissible	4	
	3.00	permissible	3	
Frame platform 0.64 m screen-printed plywood plated surface (SPP)	≤ 3.00	permissible	3	
Hatch-type access deck with ladder SPP 0.64 m screen-printed plywood plated surface (SPP)	≤ 3.00	permissible	3	
Hatch-type access deck with ladder WBQ 0.64 m chequer plate surface	2.50	permissible	3	
	3.00	permissible	3	
Hatch-type access deck without ladder SPP 0.64 m screen-printed plywood plated surface (SPP)	≤ 3.00	permissible	3	

Cross-section values of base jacks

The equivalent cross-section values of spindles to be used for stress analysis and deformation calculations according to DIN 4425 are to be assumed as follows:

BASE JACK

$A = A_S$	=	4.26 cm²
I	=	4.58 cm⁴
W_{el}	=	3.00 cm³
W_{pl}	=	1.25 × 3.00 = 3.75 cm³

EXTRACTS FROM THE DIN EN 12811 STANDARD

Working loads on scaffold layers

SCAFFOLD LAYERS

LOAD CLASS	UNIFORMLY DISTRIBUTED LOAD q_1 in kN/m²	LOAD CONCENTRATED ON A 500 mm x 500 mm AREA F_1 in kN	LOAD CONCENTRATED ON A 200 mm x 200 mm AREA F_2 in kN	PARTIAL AREA LOAD q_2 in kN/m²	Partial area factor a_p [1])
1	0.75	1.50	1.00	–	–
2	1.50	1.50	1.00	–	–
3	2.00	1.50	1.00	–	–
4	3.00	3.00	1.00	5.00	0.4
5	4.50	3.00	1.00	7.50	0.4
6	6.00	3.00	1.00	10.00	0.5

Clearance classes

SCAFFOLD LAYERS

CLASS	CLEARANCE between scaffold layers h_3	between scaffold layers and transoms or scaffold retainers h_{1a} and h_{1b}	Shoulder height h_2
H_1	$h_3 \geq 1.90$ m	$1.75 \text{ m} \leq h_{1a} \leq 1.90$ m $1.75 \text{ m} \leq h_{1b} \leq 1.90$ m	$h_2 \geq 1.60$ m
H_2	$h_2 \geq 1.90$ m	$h_{1a} \geq 1.90$ m $h_{1b} \geq 1.90$ m	$h_2 \geq 1.75$ m

Width classes

SCAFFOLD LAYERS

WIDTH CLASS	w in m
W06	0.6 ≤ w ≤ 0.9
W09	0.9 ≤ w ≤ 1.2
W12	1.2 ≤ w ≤ 1.5
W15	1.5 ≤ w ≤ 1.8
W18	1.8 ≤ w ≤ 2.1
W21	2.1 ≤ w ≤ 2.4
W24	2.4 ≤ w

Clear heights and widths of scaffold layers

b	open passageway clearance, 500 mm is the minimum requirement, and (c – 250 mm)
c	clear spacing between posts
h_{1b}, h_{1b}	clear width between scaffold layers and transoms or scaffold retainers
h_2	clear shoulder height
h_3	clear height between scaffold layers
p	clear width in the head area, 300 mm is the minimum requirement, and (c – 450 mm)
w	width of scaffold layers

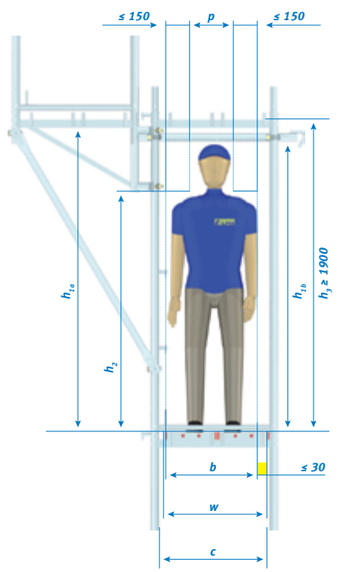

Designation of a scaffolding system according to EN 12810-1

Example: Scaffold according to EN 12810 - 3 D - SW06/250 - H1 - B- LA

Scaffold EN 12810	Frame scaffold (modular scaffold) according to DIN EN 12810-1
3	Load class 3 (see Table 3 DIN EN 12811-1)
D	Vertical drop tests on deck surface (D = calculated with drop test, N = without drop test)
SW06/250	Width class (see Table 1 DIN EN 12811-1) here between 0.60 m and 0.90 m / bay length 2.50 m
H1	Headroom class (see Table 2 DIN EN 12811-1) (as a rule, in Germany only H1 is used)
B	with sheeting (A = without sheeting, B = with sheeting)
LA	with ladder (LA = ladder, ST = stairway, LS = with both)

www.alfix-systems.com

ALFIX GmbH
Langhennersdorfer Straße 15
D-09603 Großschirma

Phone +49 (0) 37328 / 800-100
Fax +49 (0) 37328 / 800-199
eMail info@alfix-systems.com

SALE OF:
- Work and safety scaffolds
- Mobile scaffold towers
- Weather protection roofs
- Chimney scaffolds
- Shelves
- Accessories

HIRE OF:
- Work and safety scaffolds
- Mobile scaffold towers
- Weather protection roofs

Edition: June 2018