ALFIX
SECURELY SCAFFOLDED

ALFIX FAÇADE SCAFFOLDING

Catalogue and Price List

Universal frame scaffolding system.
In steel or aluminium, quality down to the last detail.

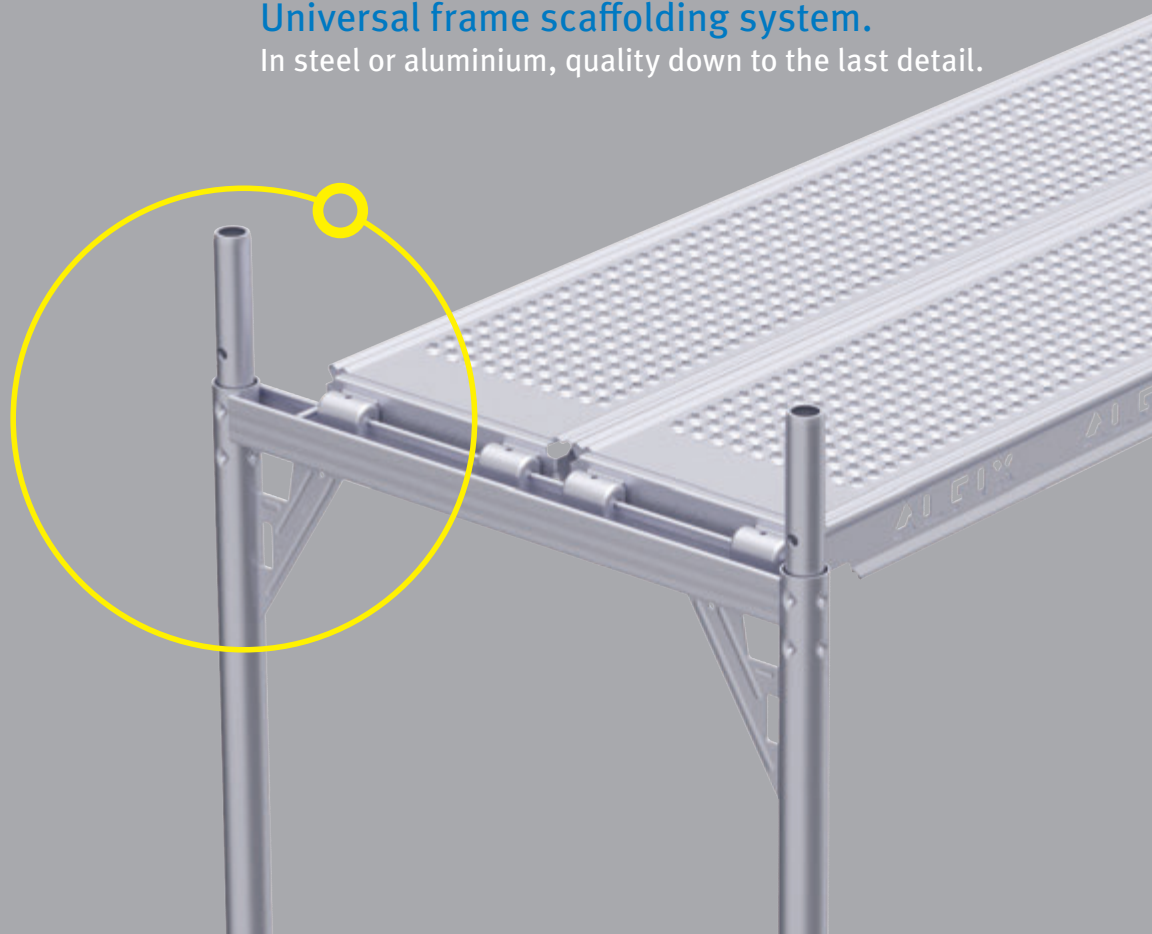

TABLE OF CONTENTS

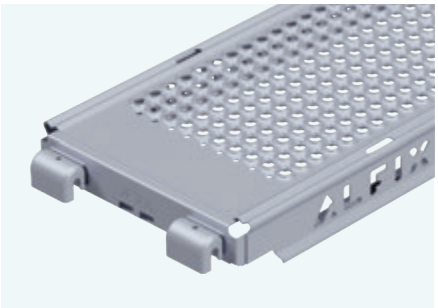

The ALFIX façade scaffolding system, in steel or aluminium, has been testes for utmost quality and reliability requirements down to the last detail. Easy handling as well as fast assembly and disassembly allow for cost-efficient and trouble-free use. Our competent team of sales representatives is available to kindly assist you offering consultation and customer support, as you plan your scaffold structure. We will gladly answer all your questions also with regard to the compatibility with third-party products. Get in touch with one of our field service representatives and stay informed.

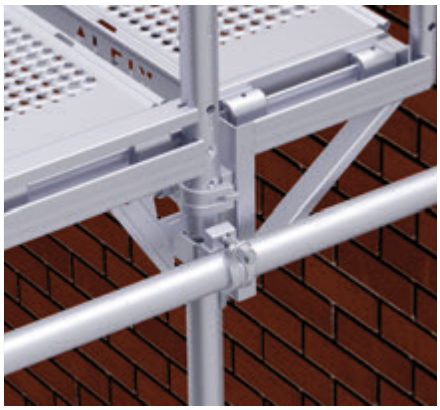

Application example: Gusset plate

All prices are net, plus statutory VAT.
With the publishing of the current catalogue, any previous version becomes invalid.

Catalogue and Price List - ALFIX Façade Scaffolding

Edition: May 2019

ALFIX FAÇADE SCAFFOLDING

The ALFIX façade scaffolding is a scaffolding system consisting of prefabricated components. It is available with the following bay lengths: 0.73 m, 1.09 m, 1.57 m, 2.07 m, 2.57 m, 3.07 m and 4.14 m. The scaffolding has two standard widths: 0.73 m and 1.09 m.

This scaffolding can be used as a working scaffolding for applications with load classes 1 up to 4 in accordance with DIN EN 12810 and 12811 (working weight per unit area: 300 kg/m² in load class 4) and as brick guard and roof guard scaffolding (max. fall height 2.00 m).

Proof of the standard assembly configuration was carried out for an assembly height of 24.00 m, plus spindle extension length.

If the scaffolding system is used for scaffoldings deviating from the standard assembly configuration, any deviations shall be evaluable according to the Technical Building Regulations and the stipulations of the relevant Technical Approval and shall be calculated for each individual case.

Overview of Basic Components

The ALFIX façade scaffolding system consists of just a few basic components. The façade scaffold's basic structure can be assembled using only a few basic components, which are available in various dimensions. Please refer to page 48 for further information on technical details.

01 Base jack
02 Assembly frame
03 ALBLITZ lightweight deck
04 End toeboard
05 Double end guardrail
06 Wooden toeboard
07 Double guardrail
08 Guardrail post
09 End guardrail frame
10 Access deck with ladder (chequer plate decking)
11 Wooden deck
12 Guardrail
13 Starter transom
14 Horizontal strut
15 Diagonal brace

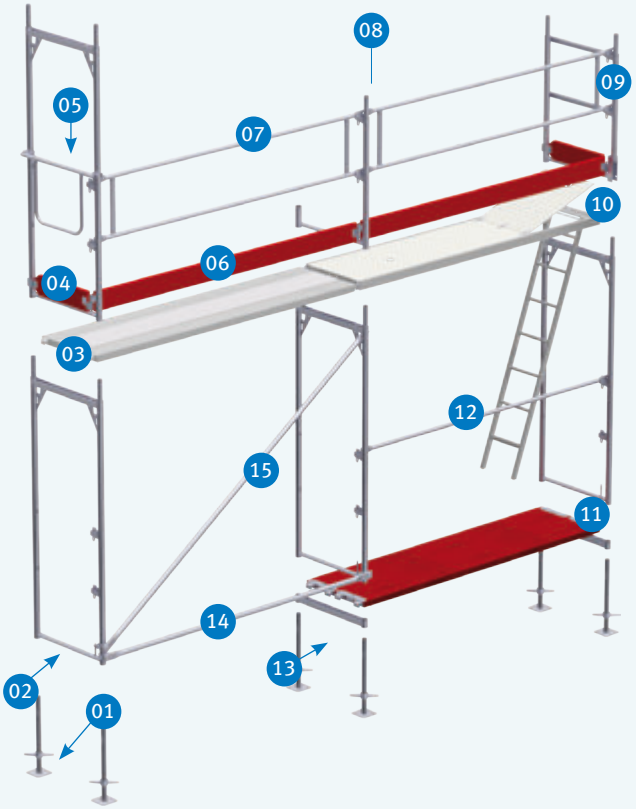

Technical approvals:

ALFIX 70 (Z-8.1-862)

ALBLITZ 70 A (Z-8.1-897)

ALBLITZ 70 S (Z-8.1-864)

ALBLITZ 100S (Z-8.1-943)

ASSEMBLY FRAMES

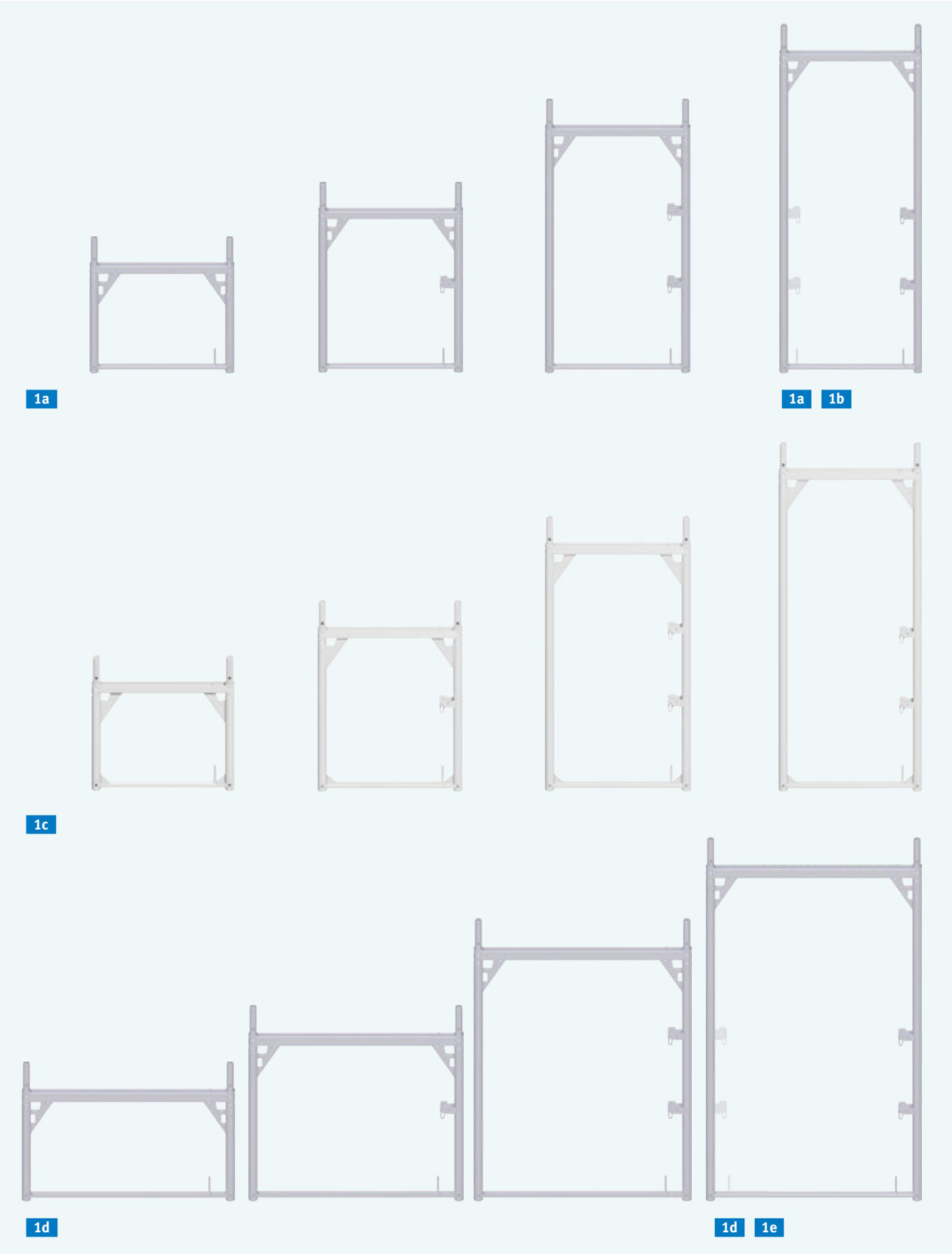

FIG.	DESCRIPTION	DIMENSIONS L/H×W [m]	WEIGHT approx. [kg]	ARTICLE NO.	PRICE [€]
01	**Assembly frame** — basic component for construction of façade scaffolding — pressed-in tube connectors allow stacking of multiple components — the lower transom is intended to retain the decking of the underlying storey level — lower transom serves to prevent decking of underlying storey from lifting off — U-profile for deck suspension — patented guardrail locking mechanism				
1a	Assembly frame, steel, 0.73 m steel tube ø 48.3 x 2.7 mm, hot-dip galvanised — width: 0.73 m for width class W06	0.67 × 0.73	10.4	10 11 067L	**57.40**
		1.00 × 0.73	12.9	10 11 100L	**62.80**
		1.50 × 0.73	16.5	10 11 150L	**63.90**
		2.00 × 0.73	18.6	10 11 200L	**64.90**
1b	Assembly frame, steel, 0.73 m steel tube ø 48.3 x 2.7 mm, hot-dip galvanised, with 4 guardrail wedge housings — to install the three-part side protection (external and internal)	2.00 × 0.73	19.6	10 11 204L	**83.00**
1c	Assembly frame, aluminium, 0.73 m aluminium tube ø 48.3 x 4.0 mm — lightweight, sturdy aluminium — width: 0.73 m	0.67 × 0.73	4.6	10 00 067	**66.30**
		1.00 × 0.73	6.1	10 00 100	**79.40**
		1.50 × 0.73	8.1	10 00 150	**94.80**
		2.00 × 0.73	9.6	10 00 200	**99.50**
1d	Assembly frame, steel, 1.09 m steel tube ø 48.3 x 3.2 mm, hot-dip galvanised — width: 1.09 m for width class W09	0.67 × 1.09	14.6	10 12 067	**69.50**
		1.00 × 1.09	17.6	10 12 100	**74.10**
		1.50 × 1.09	22.3	10 12 150	**80.80**
		2.00 × 1.09	23.0	10 12 200	**81.60**
1e	Assembly frame, steel, 1.09 m steel tube ø 48.3 x 3.2 mm, hot-dip galvanised with 4 guardrail wedge housings and toeboard pins (mounted on both sides) — to install the three-part side protection (external and internal) — width: 1.09 m for width class W09	2.00 × 1.09	24.0	10 12 204	**97.20**

APPLICATION EXAMPLE

a Gusset plate
b Guardrail wedge housing with patented locking mechanism

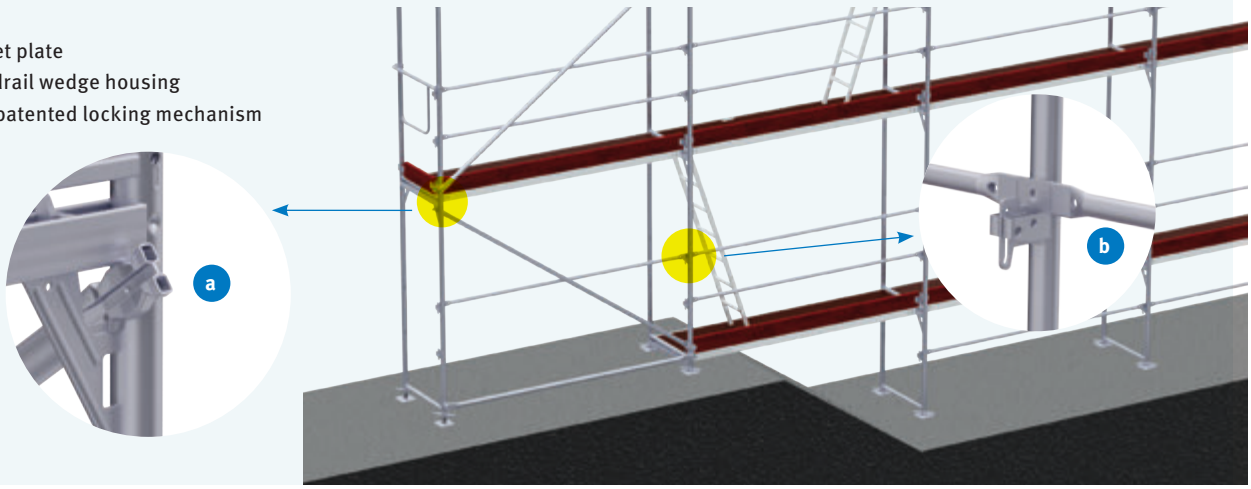

ASSEMBLY FRAMES

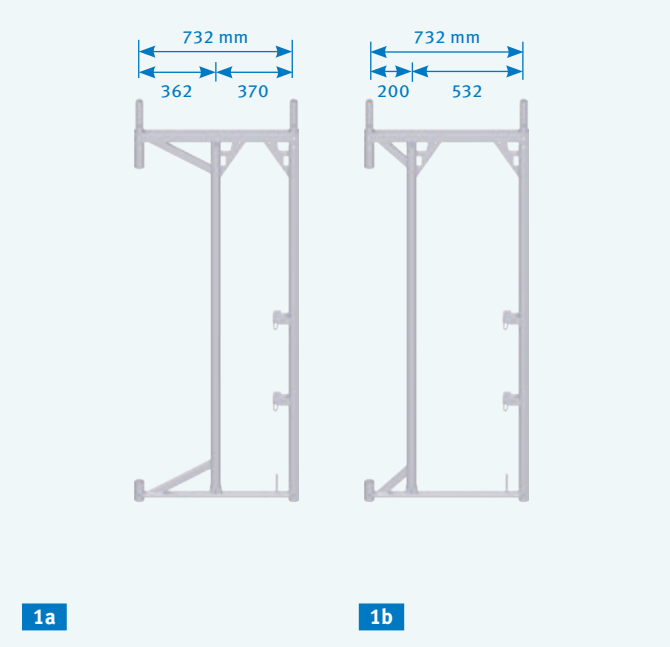

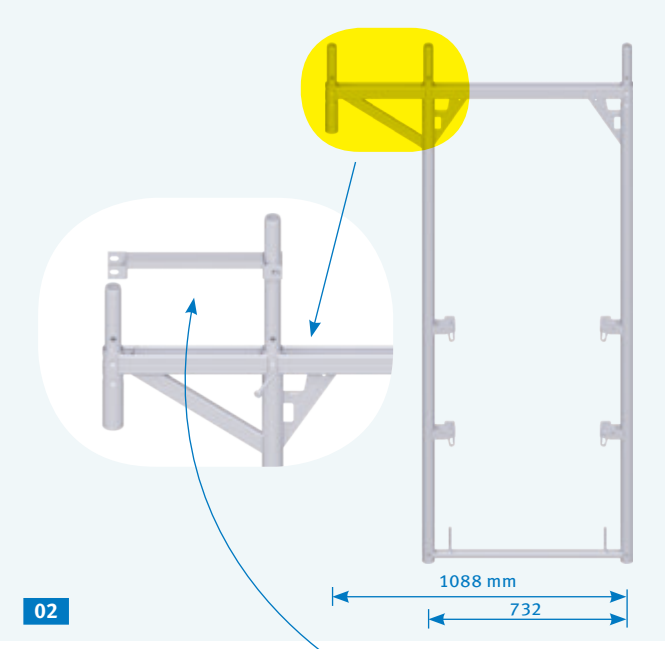

APPLICATION EXAMPLE

02 ROOF GUARD EXTENSION FRAME

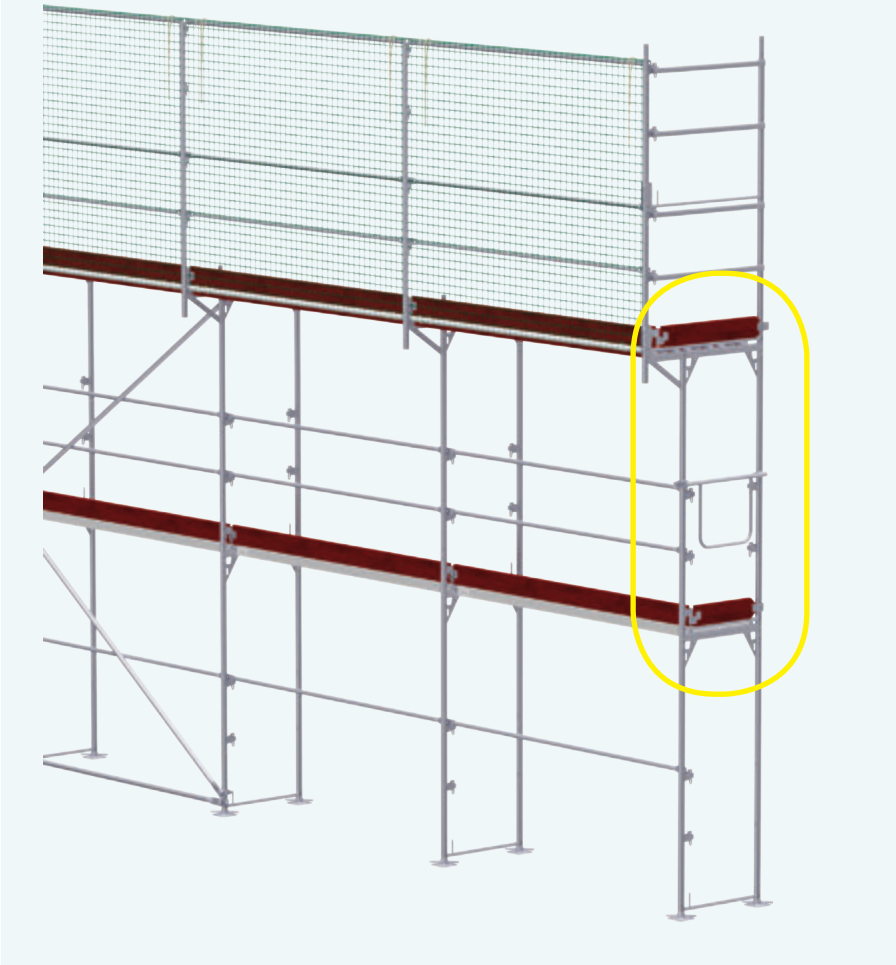

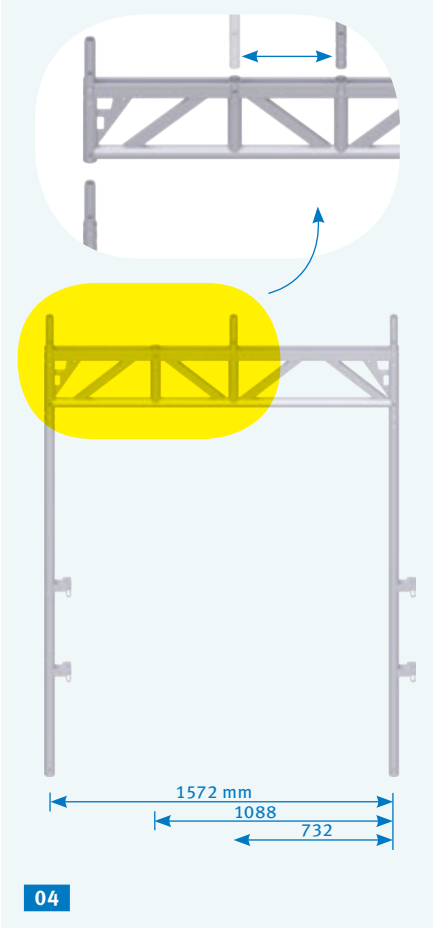

FIG.	DESCRIPTION		DIMENSIONS L/H×W [m]	WEIGHT approx. [kg]	ARTICLE NO.	PRICE [€]
01	**Cantilever frame** ⊕ steel tube ø 48.3 x 2.7 mm, hot-dip galvanised — makes for easy scaffolding around façade projections and easy working above protruding eaves	1a	2.00 × 0.37	21.7	10 19 100L	**131.30**
		1b	2.00 × 0.53	21.1	10 19 000L	**131.30**
02	**Roof guard extension frame** ⊕ steel tube ø 48.3 x 2.7 mm, hot-dip galvanised — tube connector that can be unscrewed allows for further construction with the dimensions 0.73 m and 1.09 m — assembly of internal bracket: 03 lift-off preventer required — guardrail wedge housings and toeboard pins mounted on both sides allow for internal and external bracket widening		2.00 × 0.73 to 1.09	24.2	10 19 003L	**116.10**
03	**Lift-off preventer** steel, hot-dip galvanised — lift-off prevention of deck on cantilever of roof guard extension frame		0.36	0.9	10 48 036	**see page 31**
04	**Passage frame *** ⊕ steel tube ø 48.3 x 2.7 mm, hot-dip galvanised, 3-part — consisting of 1 x ALFIX passage frame truss 1.57 m (article no. 8310059) and 2 x passage frame tubular post 1.90 m (article no. 8310016) — 1.50 m passageway for pedestrians, allows for safe pedestrian traffic — securing of the tubular posts by means of locking pins and linchpins 12 x 70 mm — space-saving transport — Guardrail wedge housings mounted on both sides enable fitting of side protection on both the inside and outside. — Middle tube connector that can be unscrewed enables adaptation of scaffolding width (0.73 m or 1.09 m)		2.20 × 1.57	40.0	10 19 006	**184.90**

* For detailed information on passage frame applications please refer to the ALFIX Façade Scaffolding Instructions for Assembly and Use.

APPLICATION EXAMPLE 04 PASSAGE FRAME

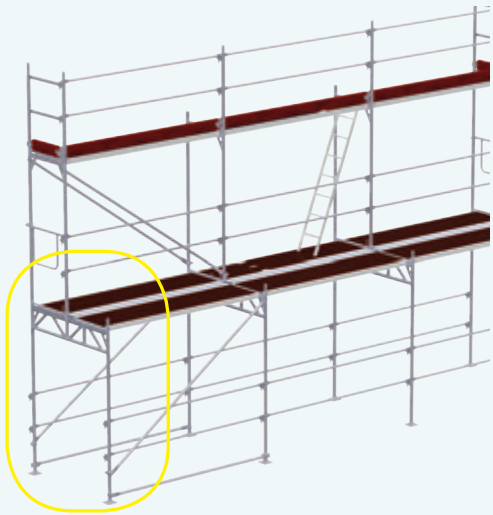

APPLICATION EXAMPLE 1a CANTILEVER FRAME

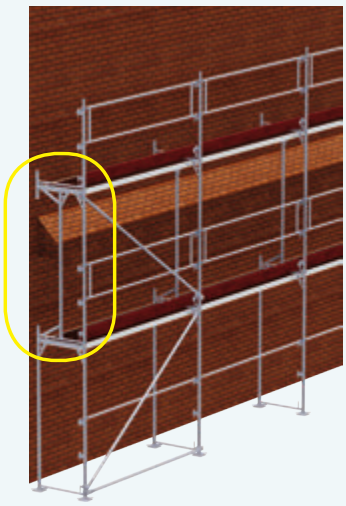

ASSEMBLY FRAMES

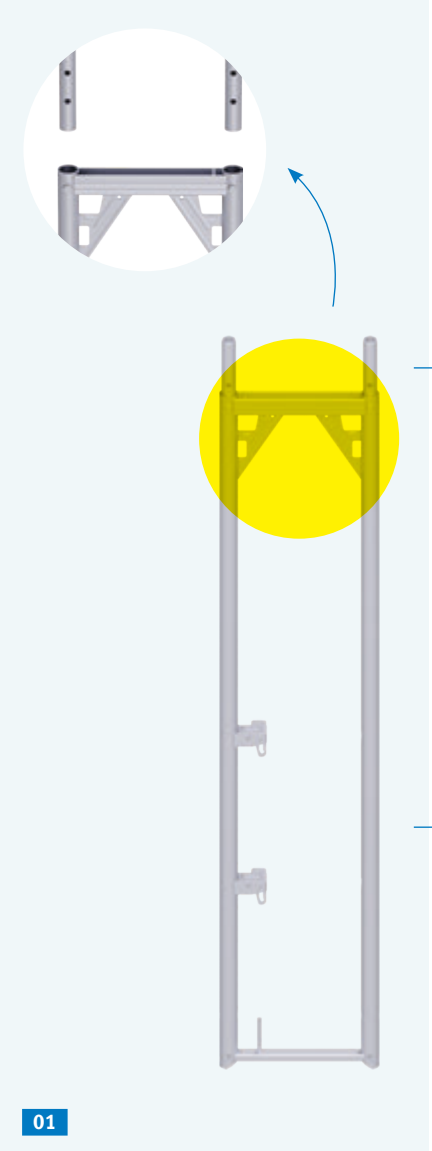

APPLICATION EXAMPLE 01 ASSEMBLY FRAME
with **bracket 0.36 m** and **bracket, special design** expanding into a cantilever frame using a 0.37 m assembly frame

a Bracket 0.36 m (see pages 30/31)
b Bracket, special design for assembly frame 0.37 m (see pages 30/31)

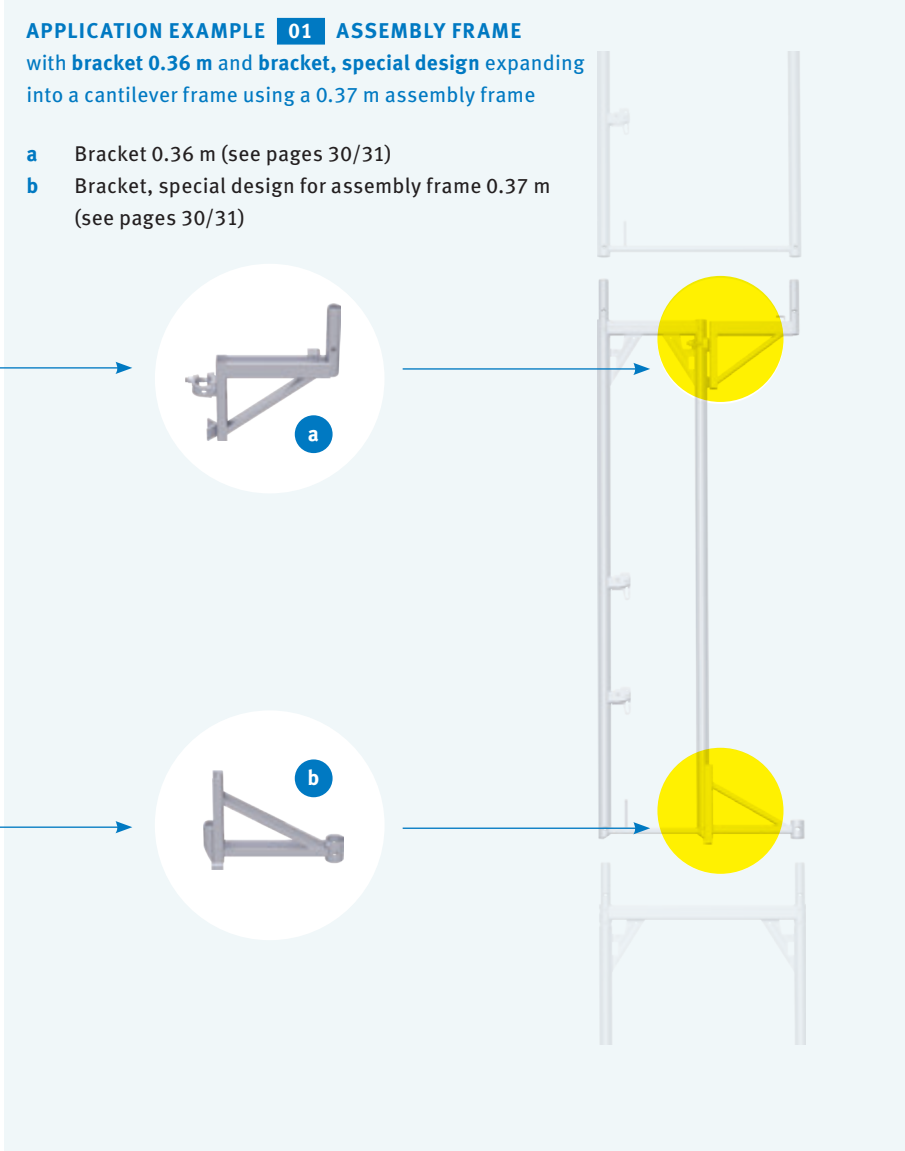

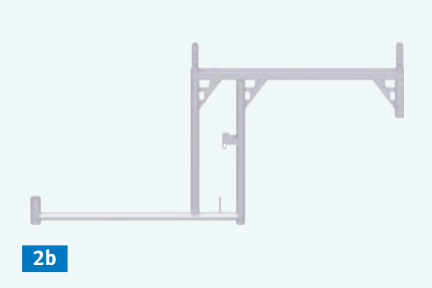

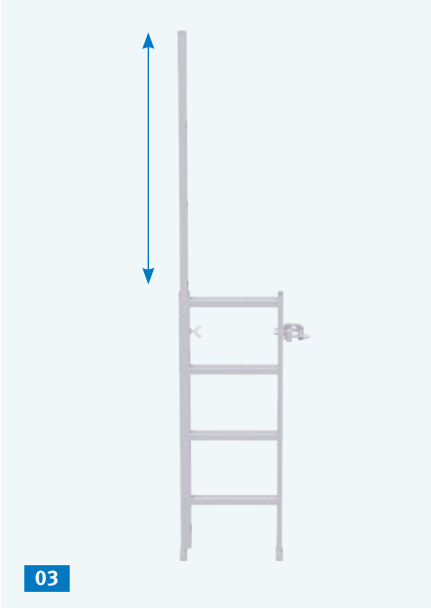

APPLICATION EXAMPLE
2a DS BRACKET FRAME AND
03 DS STOREY LADDER

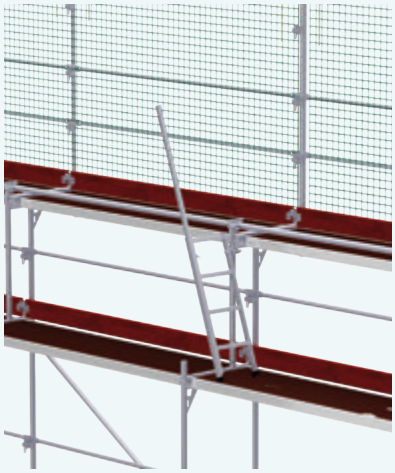

FIG.	DESCRIPTION		DIMENSIONS L/H×W [m]	WEIGHT approx. [kg]	ARTICLE NO.	PRICE [€]
01	**Assembly frame 0.37 m** ⊕ steel tube ø 48.3 x 3.2 mm, hot-dip galvanised — with screwed-on tube connector; for use in small recesses — can be used as cantilever frame in connection with special bracket (see page 30) and bracket 0.36 m (see page 30)		2.00 × 0.37	19.0	10 19 200	**73.30**
02	**DS bracket frame** ⊕ steel tube ø 48.3 x 3.2 mm, hot-dip galvanised — innovative special part — The ideal height for all craft trades. Roofers, plumbers and plasterers are able to work at the same time.	2a	0.99 × 0.73	16.0	10 32 099	**109.70** Special net price
		2b	0.99 × 1.09	22.5	10 32 299	**130.80** Special net price
03	**DS storey ladder** ⊕ steel, hot-dip galvanised — equipped with a handrail extendable up to 2 m for safe access to the uppermost level		1.00	9.0	11 42 010	**72.35**

APPLICATION EXAMPLE WITHOUT 2a DS BRACKET FRAME

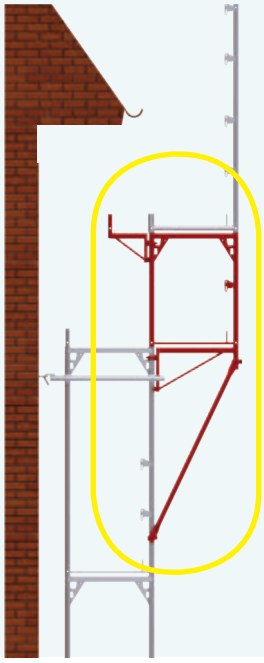

APPLICATION EXAMPLE WITH 2a DS BRACKET FRAME

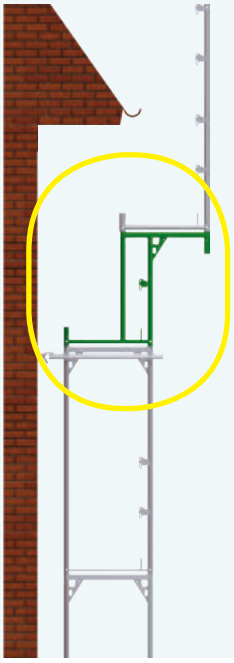

APPLICATION EXAMPLE WITH 2b DS BRACKET FRAME

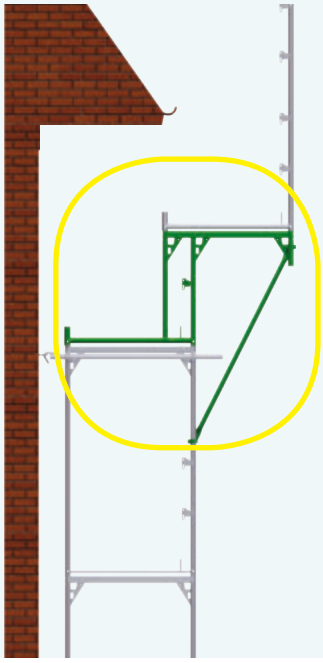

If the scaffolding is used by various craft trades, the time-consuming need for completing the required structure from many individual components can be eliminated when using a ALFIX DS bracket frame.
In the application example 2a the individual scaffold components shown in red are not needed when using the DS bracket frame (green).
In detail: diagonal cross brace 1.77 m, bracket 0.73 m, assembly frame 1.00 x 0.73 m, bracket 0.36 m, up to 3 decks.
Advantages of the DS bracket frame: cut costs, time-saving assembly/disassembly, fewer components needed, and space-saving transport.
The DS storey ladder developed particularly for the ALFIX DS bracket frame ensures safe access to the top level by means of the telescopic guardrail post (up to 2 m).

For further information please refer to the DS bracket frame Instructions for Assembly and Use.

SCAFFOLDING DECKS / ACCESS DECKS

01

02

03

04

05

06

07

FIG.	DESCRIPTION	LOAD CLASS*	DIMENSIONS L/H×W [m]	WEIGHT approx. [kg]	ARTICLE NO.	PRICE [€]
01	**Steel plank, 0.32 m wide** hot-dip galvanised, perforated — high load capacity — non-slip surface	6	0.73 × 0.32	5.6	12 21 073	**47.60**
		6	1.09 × 0.32	8.1	12 21 109	**48.50**
		6	1.57 × 0.32	11.4	12 21 157	**49.90**
		6	2.07 × 0.32	13.7	12 21 207	**55.90**
		5	2.57 × 0.32	17.1	12 21 257	**64.60**
		4	3.07 × 0.32	20.5	12 21 307	**73.30**
		3	4.14 × 0.32	32.1	12 21 414	**146.20**
02	**Wooden deck, 0.32 m wide** triple-layer bonded wood, impregnated — construction height: 48 mm — secured by a system-compatible steel head piece at both ends	6	0.73 × 0.32	6.0	12 31 073	**28.50**
		6	1.09 × 0.32	8.6	12 31 109	**29.70**
		6	1.57 × 0.32	11.0	12 31 157	**40.55**
		5	2.07 × 0.32	14.5	12 31 207	**47.85**
		4	2.57 × 0.32	18.6	12 31 257	**53.50**
		3	3.07 × 0.32	23.0	12 31 307	**61.35**
03	**Solid aluminium deck, 0.32 m wide** profile height: 48 mm — hollow chamber profiles with anti-slip longitudinal grooves — easily stackable due to stacking bulge, stacking bulge faces downwards which prevents water or ice deposits	6	1.09 × 0.32	4.7	12 11 109	**84.80**
		6	1.57 × 0.32	6.5	12 11 157	**93.50**
		6	2.07 × 0.32	8.4	12 11 207	**110.30**
		5	2.57 × 0.32	10.3	12 11 257	**126.50**
		4	3.07 × 0.32	12.2	12 11 307	**145.80**
		3	4.14 × 0.32	16.3	12 11 414	**192.90**
04	**Frame platform, 0.60 m / 0.32 m wide** aluminium, film-coated plywood decking — extremely lightweight — standard width: 60 cm — with replaceable wood section insert / metal fixtures	3	0.50 × 0.60	4.8	12 01 050	**83.40**
		3	0.73 × 0.60	6.8	12 01 073	**83.40**
		3	1.09 × 0.60	9.5	12 01 109	**99.10**
		3	1.57 × 0.60	11.5	12 01 157	**109.60**
		3	2.07 × 0.60	14.5	12 01 207	**122.30**
		3	2.57 × 0.60	17.6	12 01 257	**139.50**
		3	3.07 × 0.60	20.7	12 01 307	**165.10**
		3	4.14 × 0.32	19.1	12 01 414	**171.85**
05	**Intermediate deck, steel** hot-dip galvanised — as compensation deck for deck surfaces with different deck widths — predominantly required for surface-oriented scaffoldings	6	1.57 × 0.19	8.6	12 25 157	**42.60**
		6	2.07 × 0.19	11.2	12 25 207	**49.60**
		5	2.57 × 0.19	13.9	12 25 257	**58.00**
		4	3.07 × 0.19	16.5	12 25 307	**67.30**
06	**Gap cover** steel, hollow chamber profiles, hot-dip galvanised, film-coated plywood decking — to be placed between the decks — for covering construction-related gaps	3	1.57 × 0.10	9.0	12 26 150	**61.70**
		3	2.07 × 0.10	11.2	12 26 200	**71.25**
		3	2.57 × 0.10	13.5	12 26 250	**76.15**
		3	3.07 × 0.10	15.8	12 26 300	**83.05**
07	**ALBLITZ lightweight deck, 0.60 m wide** — profile height approx. 50 mm — combination of hollow chamber profiles and aluminium treadplate, non-slip surface, easily stackable, extremely lightweight — with borehole ø 16 mm (at the end side) to attach hooks for vertical transport	4	1.57 × 0.60	11.5	12 13 157	**130.20**
		4	2.07 × 0.60	16.7	12 13 207	**157.70**
		4	2.57 × 0.60	18.2	12 13 257	**186.30**
		3	3.07 × 0.60	21.6	12 13 307	**211.60**

* see page 48 for assignment of decking to load classes

SCAFFOLDING DECKS / ACCESS DECKS

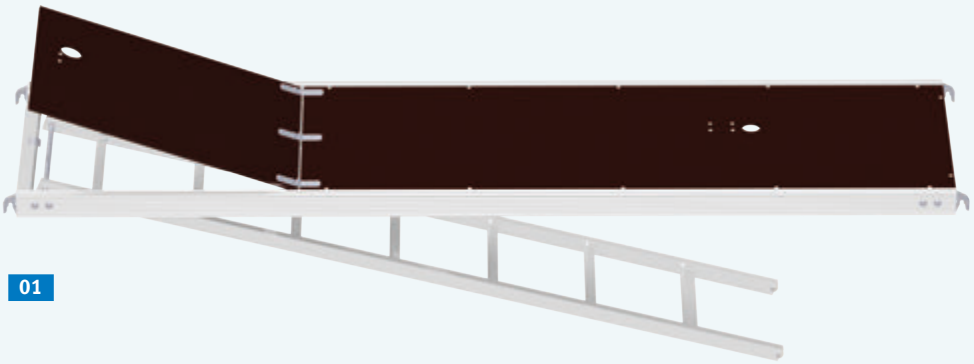

01

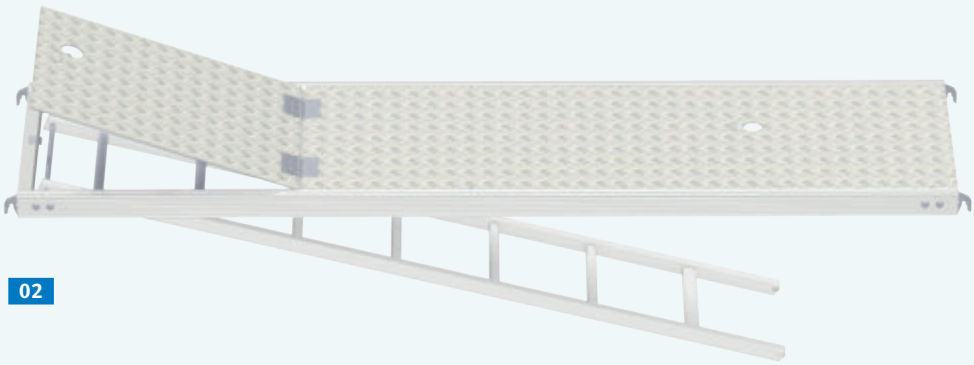

02

03

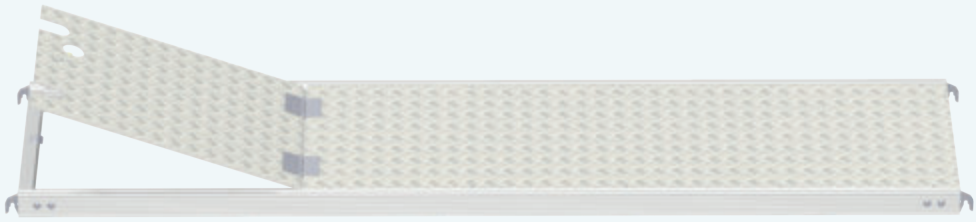

04

05

NOTE
As an **alternative** to access decks, stairways (see p. 14 - 17) can be used as an add-on access bay (stairway tower). See also Technical Rules on Operational Safety (TRBS) 2121, part 1, item 4.2.

06

ACCESS DECKS AND PLATFORMS
Platforms without hatch access have 1 borehole at the front end, access decks have 2 boreholes (Ø 16 mm). This helps easily distinguish between the different platform types when they are stacked. The borehole can also be used to attach hooks for vertical transport.

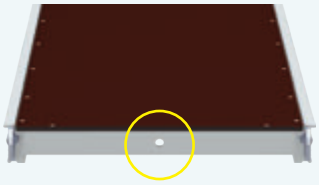

Platform

Access deck

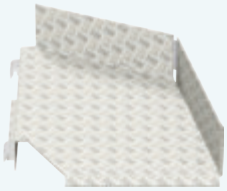

07

APPLICATION EXAMPLE
05 STEEL PLANK with locking pin and spring clip

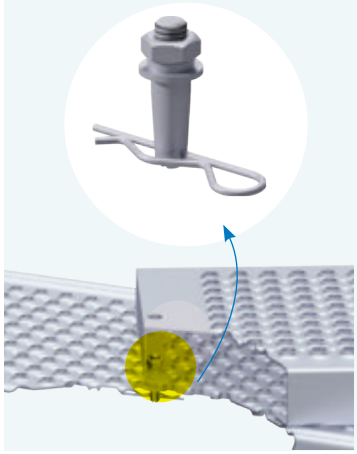

FIG.	DESCRIPTION	LOAD CLASS*	DIMENSIONS L/H×W [m]	WEIGHT approx. [kg]	ARTICLE NO.	PRICE [€]
01	**Access deck with ladder, 0.60 m** aluminium, film-coated plywood decking — convenient and fail-safe ladder and hatch latching — with replaceable wood section insert / metal fixtures	3	2.57 × 0.60	24.0	12 04 257	**262.10**
		3	3.07 × 0.60	27.0	12 04 307	**299.00**
02	**Access deck with ladder, 0.60 m** aluminium, chequer plate decking — extremely durable and weather-resistant — completely made of aluminium, for use in areas with special requirements, e.g. for industrial scaffoldings (fire protection)	3	2.57 × 0.60	25.5	12 07 257	**309.40**
		3	3.07 × 0.60	29.5	12 07 307	**345.30**
03	**Access deck without ladder, 0.60 m** aluminium, film-coated plywood decking — with replaceable wood section insert / metal fixtures, with fitting for storey ladders (see p. 14 - 15) — practical and dependable hatch latching	3	2.07 × 0.60	17.0	12 05 207	**192.90**
		3	2.57 × 0.60	22.0	12 05 257	**210.40**
		3	3.07 × 0.60	22.0	12 05 307	**243.60**
04	**Access deck without ladder, 0.60 m** aluminium, chequer plate decking — see pos. 02 — with fitting for storey ladder (see p. 14 - 15)	3	2.07 × o.6o	18.0	12 08 207	**215.90**
		3	2.57 × o.6o	22.0	12 08 257	**252.90**
		3	3.07 × o.6o	25.5	12 08 307	**287.60**
05	**Steel plank** hot-dip galvanised, with locking pin and spring clip — for covering and/or closing corner areas and other construction-related openings — only for use on steel decks — The support length must be at least 25 cm. — height: 45 mm	6	1.00 × 0.30	5.5	12 24 100	**55.35**
		6	1.50 × 0.30	8.0	12 24 150	**65.90**
		5	2.00 × 0.30	10.5	12 24 200	**75.30**
		3	2.50 × 0.30	12.8	12 24 250	**85.50**
06	**Spring clip** steel, zinc-plated — spare part for pos. 05			0.03	73 04 006	**1.10**
07	**Corner deck, adjustable** aluminium, with toeboard — for angles from 45°-90°	3	0.60	10.6	40 91 001	**319.10**

* see page 48 for assignment of decking to load classes

DETAIL:

02 ACCESS DECK (CHEQUER PLATE DECKING)

The **hatch and ladder latches** facilitate an easy release, from both the upper and the lower scaffolding levels, and ensure a safe securing of the **access hatch** and **storey ladder**. Normally, the installation of access hatches alternates one above the other. The lowest footfall level is made of system-compatible decks and serves as an installation area for the first storey ladder. For more security against sliding during transportation or assembly, the ladder suspension hardware is additionally equipped with a **spacer sleeve** on both sides intended to prevent pinching fingers.

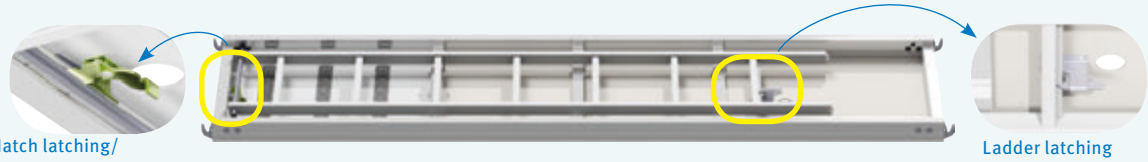

Hatch latching/
Spacer sleeve

Ladder latching

STAIRWAYS

STAIRWAY TOWER MADE OF ALFIX MODUL MULTI COMPONENTS

Please refer to our comprehensive stairway and stairway accessories programme in the **ALFIX MODUL MULTI catalogue and the stairway tower brochure.**

1a

1b

02

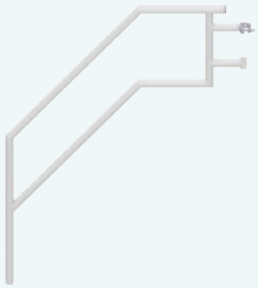

03

FIG.	DESCRIPTION		DIMENSIONS L/H×W [m]	WEIGHT approx. [kg]	ARTICLE NO.	PRICE [€]
01	**Storey ladder** for 2.00 m storey height — supplement for accesses without integrated storey ladder — suitable for bridging scaffolding levels	1a steel hot-dip galvanised	2.00 × 0.40	8.1	11 42 000	**52.90**
		1b aluminium	2.00 × 0.40	3.7	11 32 001	**60.85**
02	**ALBLITZ starting stairway, aluminium** ⊕ — at the platform with system fixture — with tubular sleeves at the bottom for accommodating base jacks — width: 0.62 m		1.40 × 1.00	17.7	12 98 100	**248.80**
03	**Stair guardrail, aluminium** ⊕ — for 02 ALBLITZ starting stairway, aluminium — with halfcoupler, wrench size 19		1.40 × 1.00	5.8	12 98 101	**109.20**

APPLICATION EXAMPLE

02 ALBLITZ STARTING STAIRWAY, ALUMINIUM
03 STAIR GUARDRAIL FOR ALBLITZ STARTING STAIRWAY, ALUMINIUM

APPLICATION EXAMPLE

02 ALBLITZ STARTING STAIRWAY, ALUMINIUM
03 STAIR GUARDRAIL FOR ALBLITZ STARTING STAIRWAY, ALUMINIUM

STAIRWAYS

1a

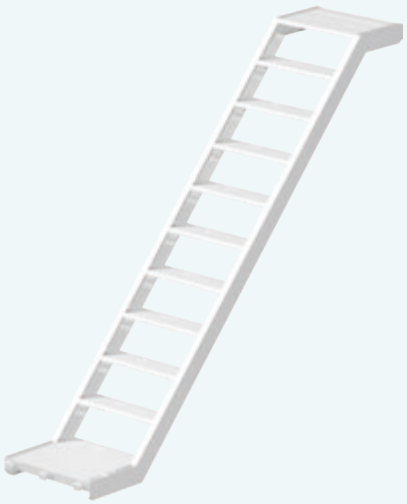

1b

1c

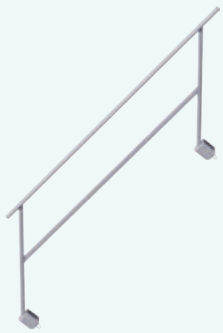

02

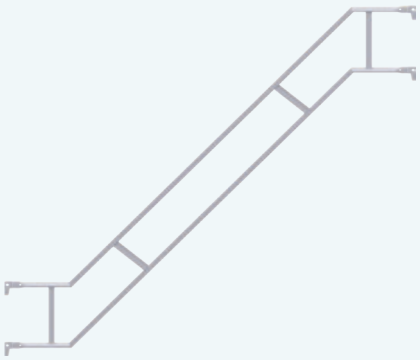

3b

4a

4b

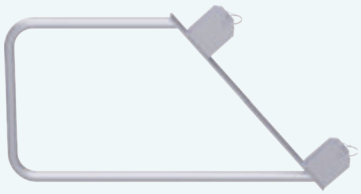

05

06

FIG.	DESCRIPTION		DIMENSIONS L/H×W [m]	WEIGHT approx. [kg]	ARTICLE NO.	PRICE [€]
01	**ALBLITZ stairway, aluminium** ⊕ max. load 2 kN/m² (load class 3) — with system fixture, rise: 20 cm — suitable for platform stairway tower applications — width: 0.62 m	1a	2.07 × 1.50	23.2	12 98 207	**424.50**
		1b	2.57 × 2.00	26.0	12 98 257	**383.00**
		1c	3.07 × 2.00	32.0	12 98 307	**467.00**
02	**Inner guardrail for aluminium stairway, height 2.00 m** steel tube ø 33.7 mm, hot-dip galvanised — compatible with ALBLITZ aluminium stairway 01 — for use with alternating stairways — incl. linchpin 12 x 70 mm with snap-on lock		2.00	13.3	11 31 000	**106.00**
03	**ALBLITZ stair guardrail, double** ⊕ steel tube ø 33.7 mm — with fixture for guardrail wedge housings	3a	2.07 × 1.50	13.0	12 98 208	**96.20**
		3b	2.57 × 2.00	15.0	12 98 258	**102.20**
		3c	3.07 × 2.00	19.0	12 98 308	**107.20**
04	**Starter transom** ⊕ steel, hot-dip galvanised — serves as starting component for stairways	4a	0.73	2.8	14 01 073	**27.20**
		4b	1.09	5.4	14 01 109	**35.90**
05	**Stair stringer fall protection** ⊕ steel tube ø 33.7 mm, hot-dip galvanised — incl. linchpin 12 x 70 mm with snap-on lock — effective fall protection when using aluminium stairs		1.00 × 0.50	8.8	11 31 001	**56.30**
06	**ALBLITZ stair guardrail post** ⊕ steel, hot-dip galvanised — for use with outer stair access to protect against falls when working on upper scaffold decks		1.10	7.3	11 31 110	**36.60**

APPLICATION EXAMPLE
STAIRWAY

- 01 ALBLITZ STAIRWAY, ALUMINIUM
- 03 ALBLITZ STAIR GUARDRAIL, STEEL
- 04 STARTER TRANSOM
- 05 STAIR STRINGER FALL PROTECTION
- 06 ALBLITZ stair guardrail post

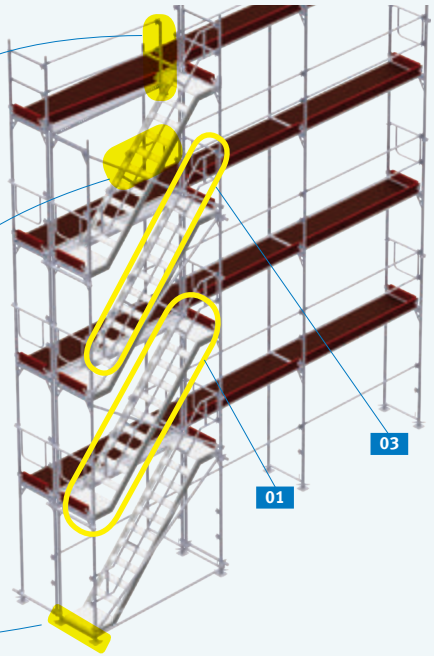

SIDE PROTECTION / GUARDRAILS

01

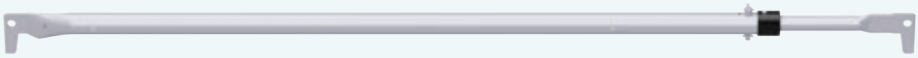

02

03

04

5a

5b

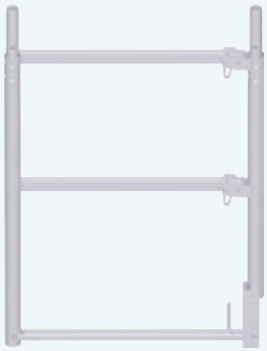

6a

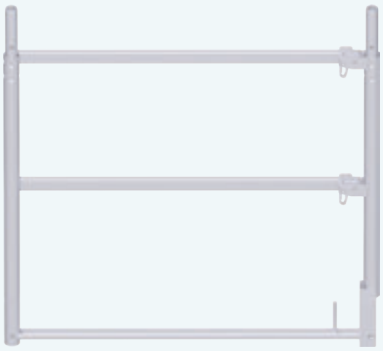

6b

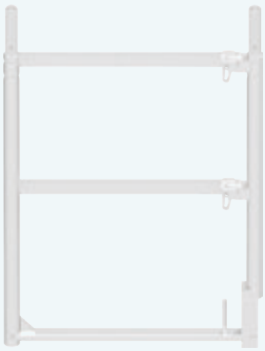

6c

FIG.	DESCRIPTION		DIMENSIONS L/H×W [m]	WEIGHT approx. [kg]	ARTICLE NO.	PRICE [€]
01	**Guardrail** steel tube ø 33.7 mm, hot-dip galvanised — for construction of side protection — with fixture for guardrail wedge housings — available for all bay lengths — Guardrails can also be used as horizontal struts due to a borehole in the mounting hook (see pages 24/25).		0.73	1.7	10 60 073	**13.50**
			1.09	2.4	10 60 109	**14.10**
			1.57	3.4	10 60 157	**14.60**
			2.07	4.4	10 60 207	**15.70**
			2.57	5.2	10 60 257	**16.90**
			3.07	5.7	10 60 307	**18.00**
02	**Telescopic guardrail** steel tube, hot-dip galvanised — continuously adjustable by means of telescopic tube — incl. linchpin with snap-on lock for transport security		1.57 – 2.57	6.3	10 99 000	**55.40**
			2.07 – 3.07	8.3	10 99 001	**55.40**
03	**Double guardrail, steel** steel tube ø 33.7 mm, hot-dip galvanized — for construction of side protection with simultaneous diagonal bracing		1.57	8.4	10 61 157	**36.70**
			2.07	10.4	10 61 207	**39.80**
			2.57	12.1	10 61 257	**42.20**
			3.07	15.6	10 61 307	**48.60**
			4.14	21.5	10 61 414	**86.20**
04	**Double guardrail, aluminium** aluminium tube ø 40 mm, with intermediate diagonal braces — for construction of side protection with simultaneous diagonal bracing		1.57	3.3	10 51 158	**53.30**
			2.07	4.5	10 51 208	**72.00**
			2.57	5.4	10 51 258	**79.10**
			3.07	6.0	10 51 308	**91.20**
05	**Double end guardrail** ⊕ steel tube ø 33.7 mm, hot-dip galvanised — for use as side protection on the end sides	5a wrench size 19	0.73	3.8	10 62 073	**29.20**
		5b wrench size 19	1.09	4.5	10 62 109	**33.20**
06	**End guardrail frame** ⊕ tube ø 48.3 mm — serves as end side protection and lift-off preventer on top level — patented fixture slot for fixing tube end parts of guardrail posts or protective net posts	6a steel hot-dip galvanised	1.00 × 0.73	13.0	10 63 073L	**66.90**
		6b steel hot-dip galvanised	1.00 × 1.09	16.2	10 63 109	**75.20**
		6c aluminium	1.00 × 0.73	6.0	10 52 073	**87.00**

APPLICATION EXAMPLE
6a END GUARDRAIL FRAME

ASSEMBLY
6a END GUARDRAIL FRAME

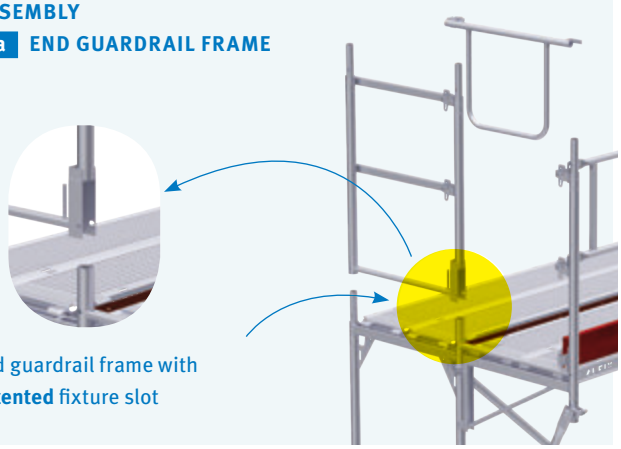

End guardrail frame with **patented** fixture slot

SIDE PROTECTION / GUARDRAILS

01

APPLICATION EXAMPLE

The tube connectors in the guardrail posts allow for connecting two posts and thus ensuring a simple and space-saving storage and transport.

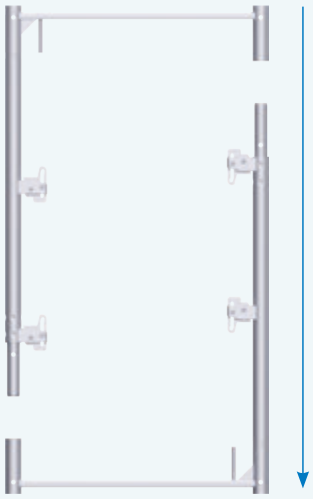

APPLICATION EXAMPLE
INTERNAL GUARDRAIL HOLDER

01 INTERNAL GUARDRAIL HOLDER

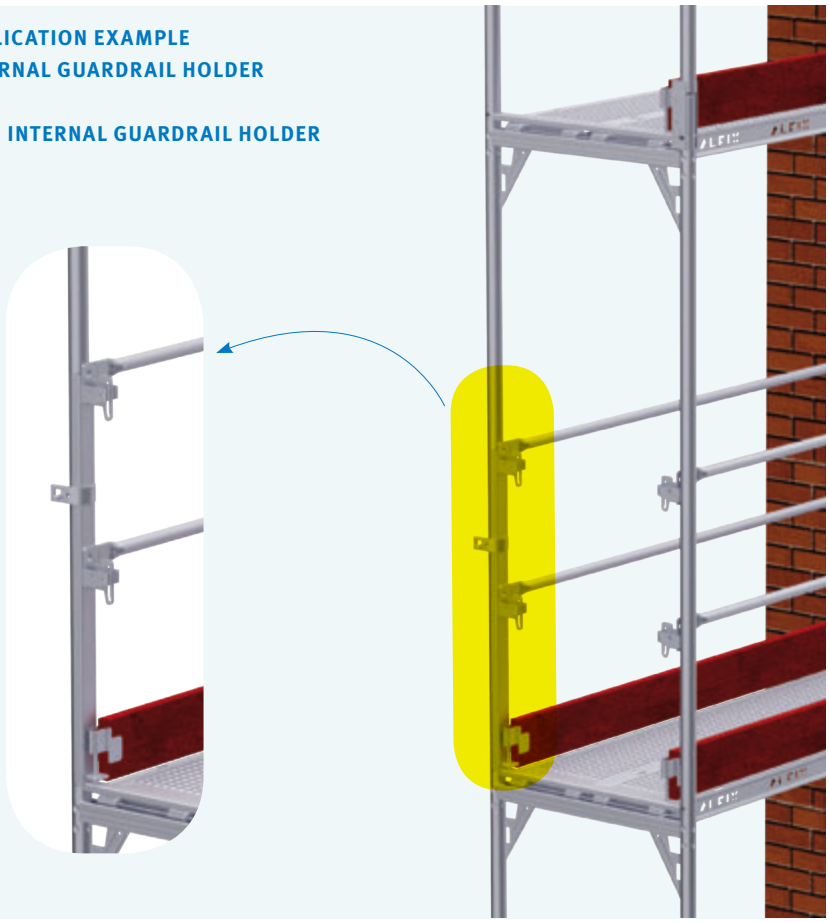

2a

2b

3a 0.73 m

3a 1.09 m

3b

04

FIG.	DESCRIPTION		DIMENSIONS L/H×W [m]	WEIGHT approx. [kg]	ARTICLE NO.	PRICE [€]
01	**Internal guardrail holder** ⊕ steel, hot-dip galvanised — with bended profile coupler — for quick assembly of a three-part side protection		1.00	3.6	10 65 713	**30.20**
02	**Guardrail post, single** ⊕ ø 48.3 mm, with short lift-off preventer — also serves as upper lift-off preventer at bracket level 0.36 m — patented guardrail locking mechanism	2a steel hot-dip galvanised	1.00	5.4	10 65 100L	**27.10**
		2b aluminium	1.00	2.8	10 54 000	**36.80**
03	**Guardrail post** ⊕ ø 48.3 mm — simultaneously serves as upper lift-off preventer — patented guardrail locking mechanism	3a steel hot-dip galvanised	1.00 × 0.73	7.0	10 64 073L	**37.30**
			1.00 × 1.09	8.5	10 64 100	**39.00**
		3b aluminium	1.00 × 0.73	3.4	10 53 100	**47.50**
04	**Corner guardrail wedge housing** ⊕ steel, hot-dip galvanised — for easy assembly of telescopic guardrails (within corner sections)			1.3	13 09 001	**13.15**

APPLICATION EXAMPLE
2a GUARDRAIL POST, SINGLE

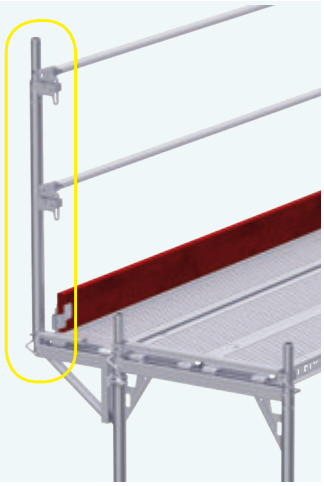

APPLICATION EXAMPLE
3a GUARDRAIL POST

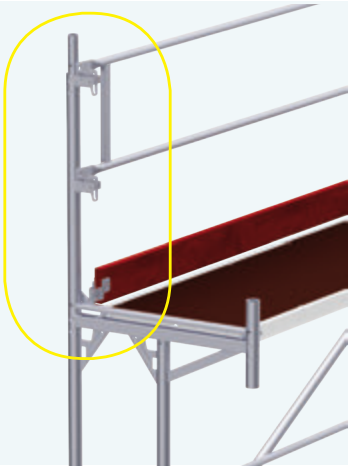

APPLICATION EXAMPLE
04 CORNER GUARDRAIL WEDGE HOUSING

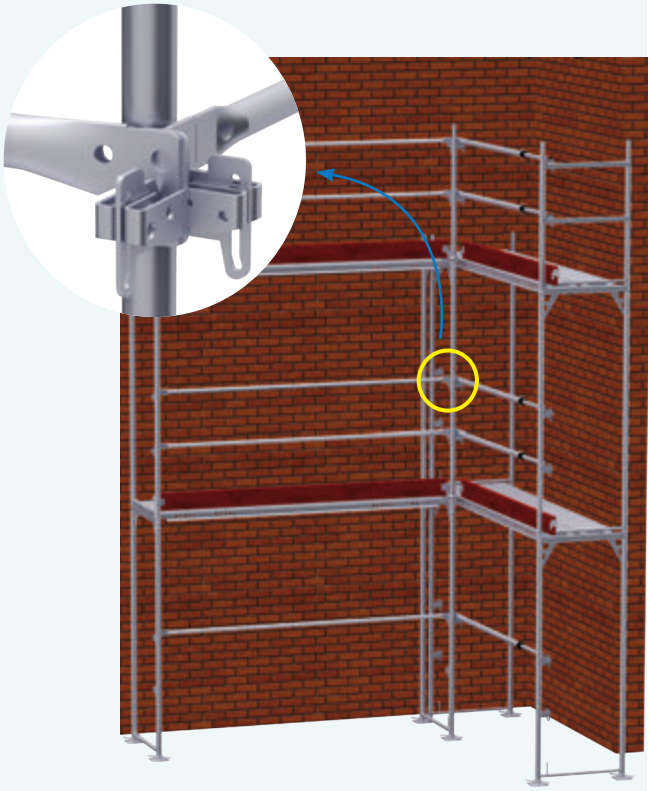

SIDE PROTECTION / TOEBOARDS

01

02

03 0.73 m

04 0.73 m

05 rolled up guard net system

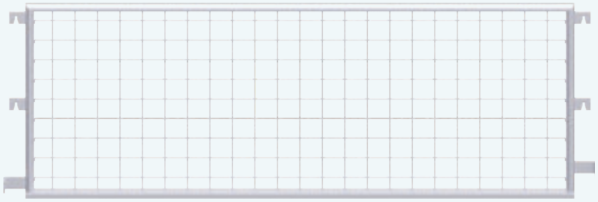

06

7a 0.73 m

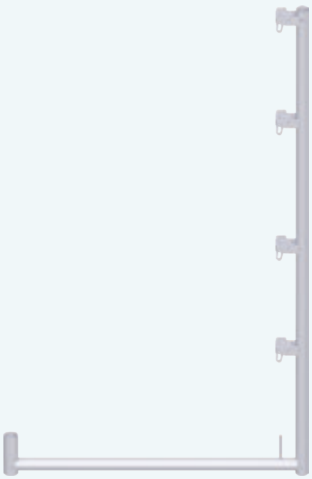

7b 1.09 m

08 0.36/ 0.50/ 0.73

09

APPLICATION EXAMPLE

05 GUARD NET SYSTEM
06 SAFETY SIDE MESHGUARD
7a PROTECTIVE NET POST

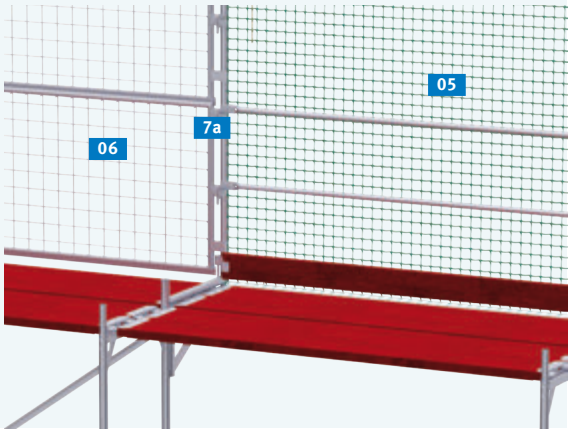

APPLICATION EXAMPLE

08 PROTECTIVE NET POST

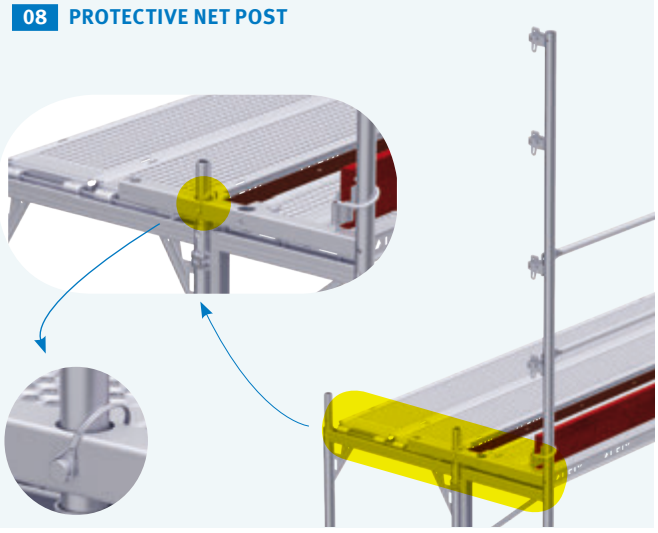

FIG.	DESCRIPTION	DIMENSIONS L/H×W [m]	WEIGHT approx. [kg]	ARTICLE NO.	PRICE [€]
01	**Toeboard, wood** — impregnated wood (weather-resistant) — fitted with toeboard pins or toeboard coupler — with claws, standard height 15 cm	0.73	2.0	12 50 073	**11.80**
		1.09	2.7	12 50 109	**13.10**
		1.57	4.0	12 50 157	**14.10**
		2.07	5.0	12 50 207	**15.10**
		2.57	6.5	12 50 257	**16.30**
		3.07	7.5	12 50 307	**17.70**
		4.14	9.0	12 50 414	**29.90**
02	**Toeboard, steel** steel, galvanised — fitted with toeboard pins or toeboard coupler — with claws, standard height 15 cm	0.73	1.7	12 52 073	**13.70**
		1.09	2.4	12 52 109	**17.75**
		1.57	3.4	12 52 157	**22.65**
		2.07	4.4	12 52 207	**26.80**
		2.57	5.4	12 52 257	**31.50**
		3.07	6.4	12 52 307	**37.25**
		4.14	8.5	12 52 414	**46.10**
03	**End toeboard, wood** — impregnated wood (weather-resistant) — fitted with toeboard pins or toeboard coupler — with claws, standard height 15 cm	0.73	1.7	12 51 073	**10.60**
		1.09	2.4	12 51 109	**12.30**
04	**End toeboard, steel** steel, galvanised — fitted with toeboard pins or toeboard coupler — with claws, standard height 15 cm	0.73	1.7	12 51 076	**13.60**
		1.09	2.4	12 51 112	**16.00**
05	**Guard net system** ⊕ ready for mounting, mesh size 100 mm — with guardrail and aluminium tube with tube connector — with integrated fixing cords (left and right) — for system-independent nets please refer to the ALFIX Accessories Catalogue	2.07 × 2.00	4.7	14 22 207	**133.80**
		2.57 × 2.00	6.8	14 22 257	**152.05**
		3.07 × 2.00	8.1	14 22 307	**175.50**
06	**Safety side meshguard** ⊕ steel tube ø 38 mm, hot-dip galvanised — for use in conjunction with brick guards — if a safety net post is used, two safety side meshguards are mounted one above the other	2.07 × 1.00	17.2	14 27 200	**129.20**
		2.57 × 1.00	20.2	14 27 257	**141.50**
		3.07 × 1.00	23.2	14 27 307	**159.80**
07	**Protective net post** ⊕ steel tube ø 48.3 mm, hot-dip galvanised — for use in brick guards, with 4 guardrail wedge housings	7a 2.00 × 0.73	14.6	10 71 073	**83.80**
		7b 2.00 × 1.09	16.3	10 71 070	**83.80**
08	**Protective net post** ⊕ steel tube ø 48.3 mm, hot-dip galvanised — for use in conjunction with brick guards on brackets of 0.36 m, 0.50 m, 0.73 m — with 4 guardrail wedge housings	2.00 × 0.36/ 0.50/ 0.73	13.5	10 71 077	**83.80**
09	**Adapter for protective net post** ⊕ steel, hot-dip galvanised — adapter for 08 protective net post for extending up to 1.09 m		2.4	10 71 099	**15.30**

EXTENSION PARTS

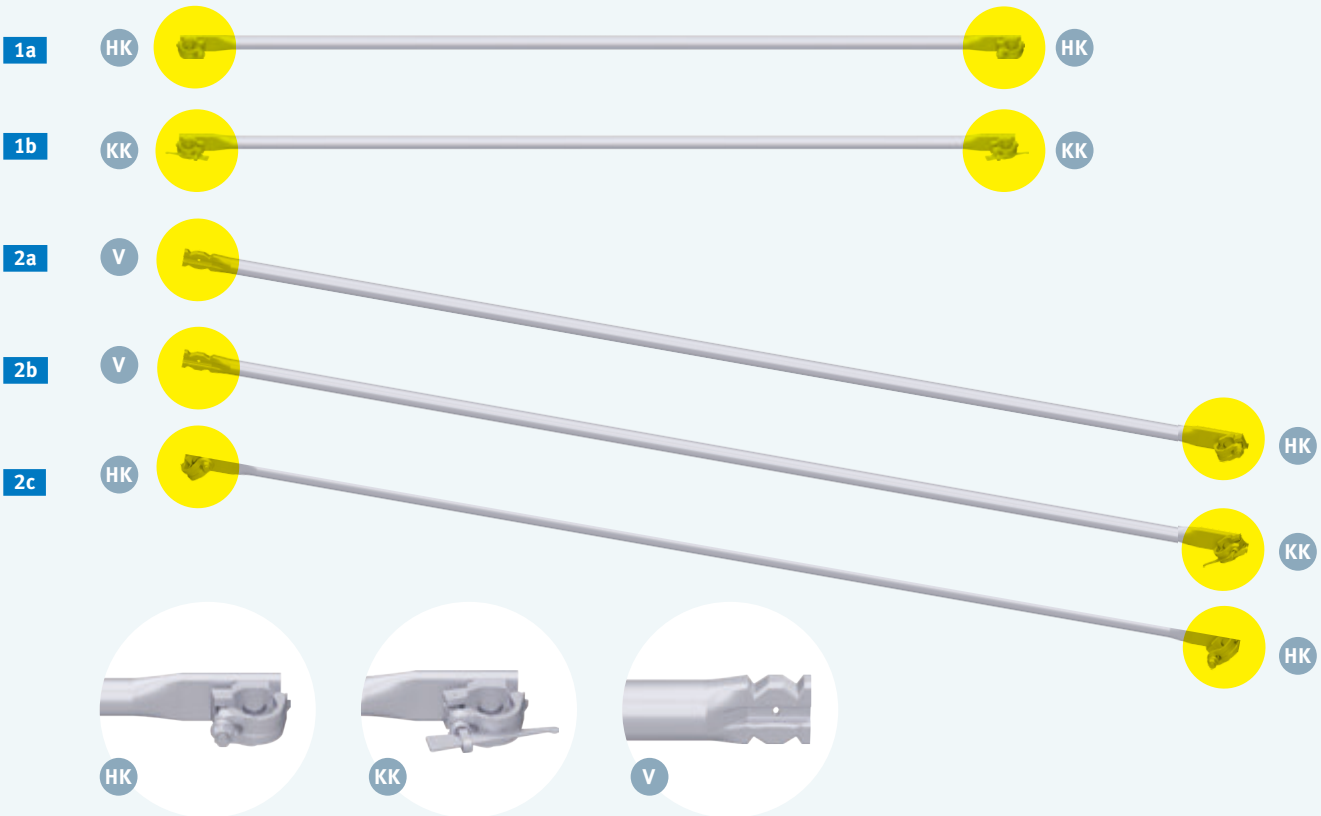

swivel halfcoupler

swivel wedge coupler

press-fitting for suspension

3a

3b

04

05

APPLICATION EXAMPLE

3a TRANSOM with notch for receiving the toeboard pins

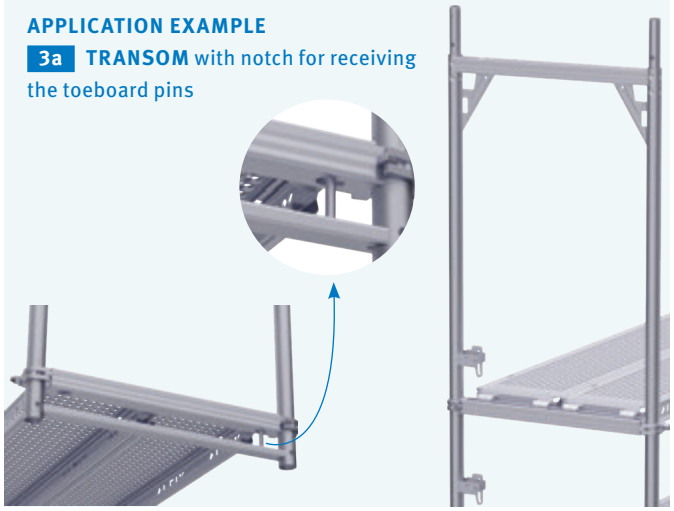

APPLICATION EXAMPLE

GUARDRAIL used as horizontal strut (fastened by means of toeboard pins through a borehole in the mounting hook)

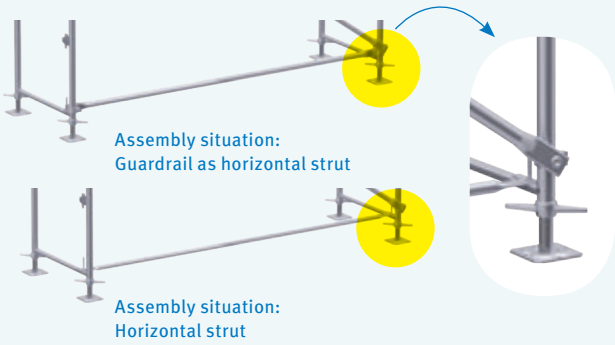

FIG.	DESCRIPTION			DIMENSIONS L/H×W [m]	WEIGHT approx. [kg]	ARTICLE NO.	PRICE [€]
01	**Horizontal strut** ⊕ steel tube ø 42.4 mm, hot-dip galvanised — for the lower horizontal connection in a diagonal bay	1a	with two swivel halfcouplers, wrench size 19	2.07	5.5	11 02 207	**52.60**
				2.57	6.5	11 02 257	**56.20**
				3.07	7.6	11 02 307	**66.20**
		1b	with two swivel wedge couplers	2.07	5.5	11 02 208	**52.60**
				2.57	6.5	11 02 258	**56.20**
				3.07	7.6	11 02 308	**66.20**
02	**Diagonal brace** ⊕ steel tube ø 42.4 mm, hot-dip galvanised — for bracing the scaffolding — alignment of assembly frames possible for single-sided suspension in gusset, except for bay length 1.57 m and 4.14 m	2a	with swivel halfcoupler, wrench size 19	for bay 2.07 m	2.80	6.5	11 00 280	**29.70**
				for bay 2.57 m	3.20	7.3	11 00 320	**31.20**
				for bay 3.07 m	3.60	7.9	11 00 360	**33.30**
		2b	with swivel wedge coupler	for bay 2.07 m	2.80	6.5	11 00 281	**29.70**
				for bay 2.57 m	3.20	7.3	11 00 321	**31.20**
				for bay 3.07 m	3.60	7.9	11 00 361	**33.30**
		2c	with two swivel halfcouplers, wrench size 19	for bay 1.57 m	2.36	6.1	11 00 150	**44.10**
				for bay 4.14 m ø 57.0 mm	4.43	14.0	11 00 414	**83.80**
03	**Transom** ⊕ steel, hot-dip galvanised — U-profile with halfcouplers for accommodating decks at intermediate levels or directly above the lift-off preventer of assembly frames with the purpose of building a deck surface for storey ladders with notch for receiving the toeboard pins of the assembly frames	3a		wrench size 19	0.73	3.2	14 02 719	**40.20**
		3b		wrench size 19	1.09	5.9	14 02 119	**44.80**
04	**Quick-release anchor** steel tube ø 48.3 mm, hot-dip galvanised — with hooks and guide plate to secure against rotation, for suspension below the U-profile — flexible wall distance, fastened with one standard coupler				0.65	2.3	13 62 065	**13.00**
05	**Distance tube** steel tube ø 48.3 mm, hot-dip galvanised — assembly with two standard couplers to both frame tubes, starting at a length of 1.00 m — with borehole for locking the EIFS anchor sleeve using a linchpin, starting at a length of 1.00 m				0.40	1.5	13 61 040	**9.90**
					1.00	3.3	13 61 100	**15.50**
					1.30	4.2	13 61 130	**17.90**
					1.50	4.8	13 61 150	**21.10**

APPLICATION EXAMPLE:

01 Horizontal strut
02 Diagonal brace

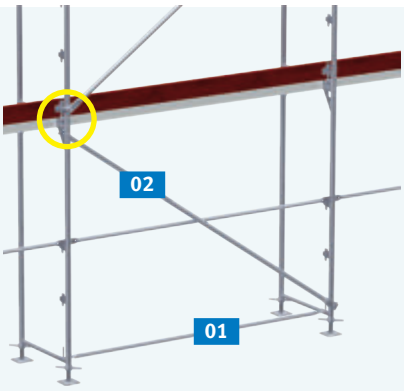

APPLICATION EXAMPLE:
02 DIAGONAL BRACE
suspended in the gusset of the assembly frame

EXTENSION PARTS

01 0.40 m 0.60 m 0.80 m

02

03

APPLICATION EXAMPLE

06 ROLLING BEAM, UNIVERSAL DESIGN

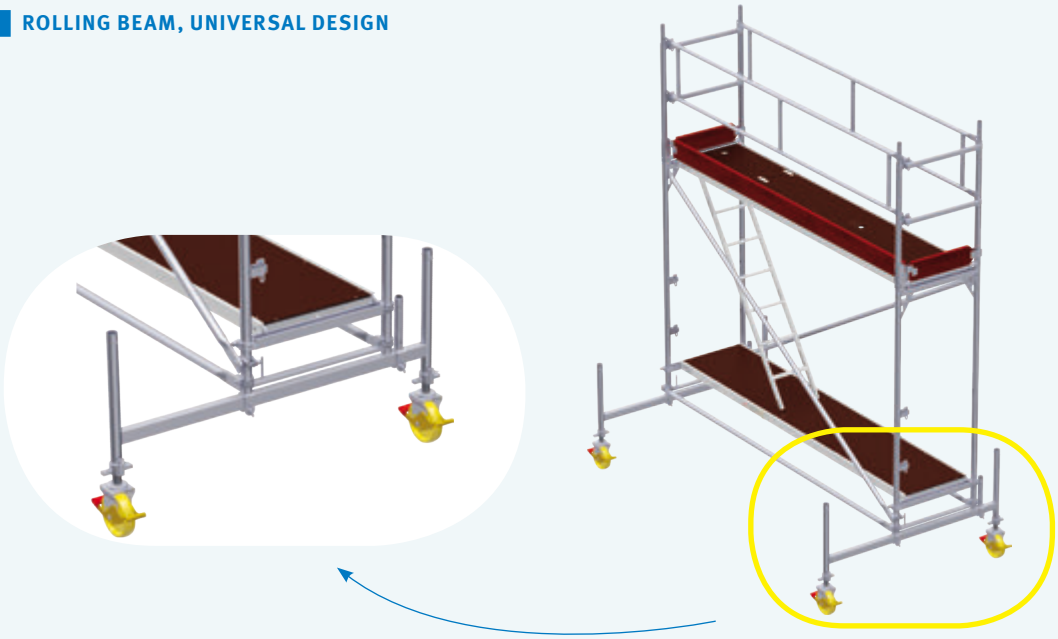

04

05

06

07

FIG.	DESCRIPTION	SPINDLE TRAVEL [max.]	DIMENSIONS L/H×W [m]	WEIGHT approx. [kg]	ARTICLE NO.	PRICE [€]
01	**Base jack** steel, hot-dip galvanised — baseplate 15 x 15 cm, threaded tube ø 38 mm	0.25	0.40	3.0	11 51 040	**14.40**
		0.45	0.60	3.6	11 51 060	**15.90**
		0.60	0.80	4.4	11 51 080	**22.90**
02	**Base jack, swivelling** steel, hot-dip galvanised — base plate 15 x 15 cm, threaded tube ø 38 mm	0.45	0.60	4.5	11 52 060	**35.50**
03	**Spacer tube** ⊕ steel, hot-dip galvanised — adjustment function, e.g. with downward stairway, secured by locking pin — multiple height adjustment possibilities thanks to 120 mm hole raster		1.80	6.4	13 60 180	**34.40**
04	**Locking pin** steel, hot-dip galvanised — to secure scaffolding components			0.13	14 50 000	**1.10**
05	**Rolling beam** steel, hot-dip galvanised — for system width 0.73 m — width: 2 m, with tube connectors at different positions for various modes of assembly and fitting		2.00	18.6	14 12 200	**120.40**
06	**Rolling beam, universal design** ⊕ steel, hot-dip galvanised — two moveable tube connectors allow for system-independent use		1.60	10.7	30 07 510	**65.40**
			2.00	14.6	30 07 610	**90.25**
07	**Castor** — wheel type: plastic ø 200 mm, with twinbrake lever — load centering — with thread for adjusting the height — permissible load 10 kN — wing nut with lock	0.35	0.50	6.5	14 12 007	**128.10**

APPLICATION EXAMPLE
03 SPACER TUBE

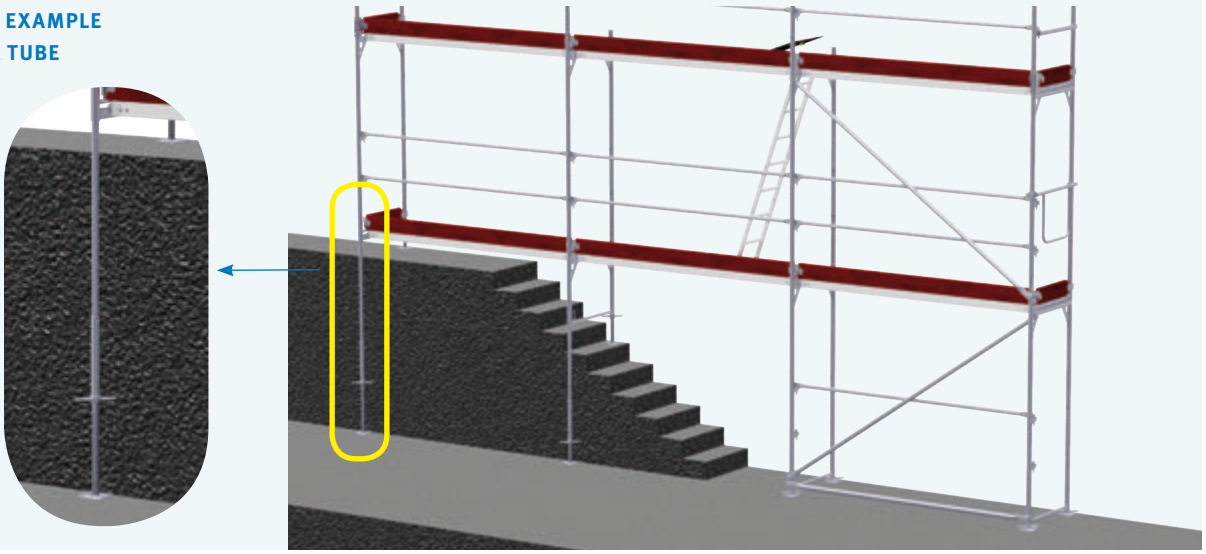

ANCHORING

1a 225 mm

2a for anchor sleeve 300

1b 275 mm

2b for anchor sleeve 350

1c 400 mm

2c for anchor sleeve 475

03

04

05

06

07

APPLICATION EXAMPLE
EIFS ANCHOR PAIR assembled
(wall without heat insulation)

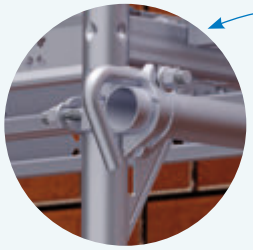

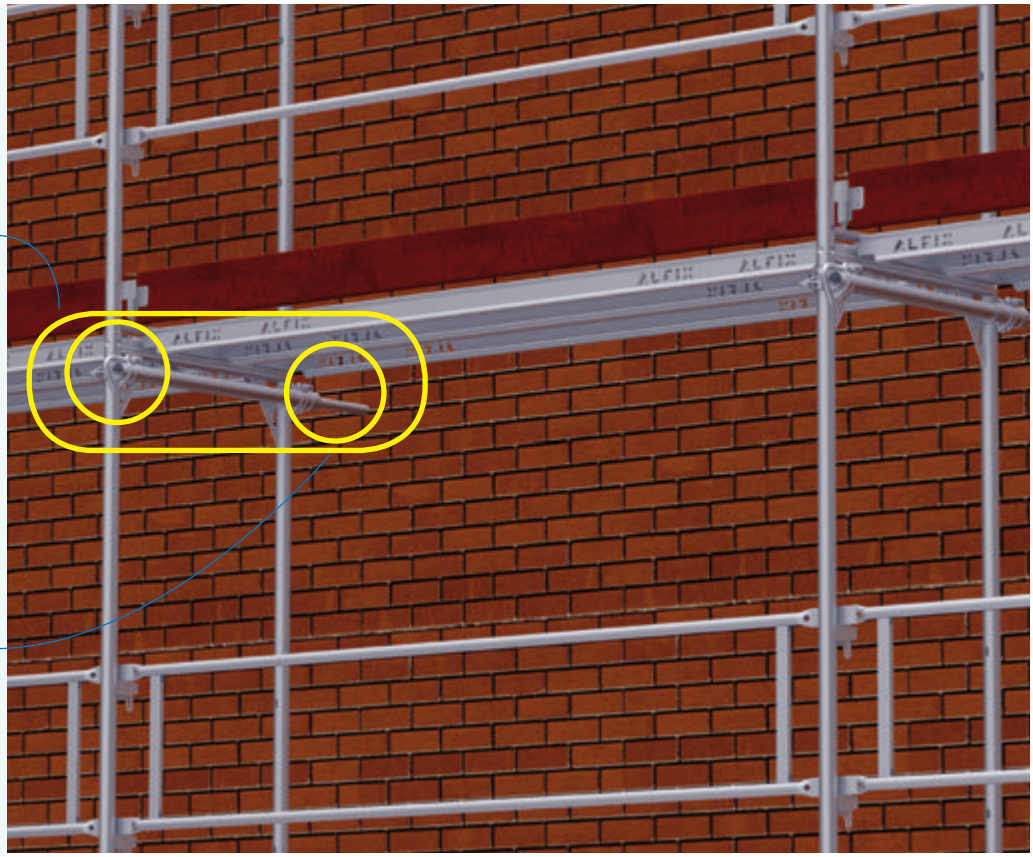

FIG.	DESCRIPTION	LENGTH [m]	WEIGHT approx. [kg]	ARTICLE NO.	PRICE [€]
01	**Anchor sleeve** steel, hot-dip galvanised — for anchoring façade scaffoldings to buildings for which EIFS is required / has already been installed — anchoring generally required only at every 4th-5th anchoring point — can be completely removed when dismantling, and is therefore suitable for reinstallation several times — the opening resulting from the removal of the anchor sleeve must be sealed using an EIFS NEOPOR® 32 insulation plug and a lamellar plug — for insulation thicknesses of up to 160 mm and when using standard reduction couplers additional widening of the bay is not required	1a 300 EIFS thickness of up to 220 mm	1.8	13 60 300	**34.90**
		1b 350 EIFS thickness of up to 270 mm	2.0	13 60 350	**38.45**
		1c 475 EIFS thickness of up to 395 mm	2.8	13 60 475	**42.95**
02	**Ring screw** galvanised, ø 12 mm	2a 300	0.3	37 02 300	**2.65**
		2b 350	0.4	37 02 350	**2.95**
		2c 500	0.6	37 02 500	**4.10**
03	**Flexible corrugated tube** plastic, black	25	3.6	13 60 025	**104.20**
04	**EIFS insulation plug NEOPOR® 32** 220 mm			13 60 002	**0.65**
05	**Linchpin** galvanised, 12 x 70 mm, with snap-on lock		0.1	13 60 000	**2.30**
06	**Lamellar plug** clear plastic, ø 32 mm			13 60 001	**1.10**
07	**Standard reduction coupler** 60 / 48 mm, wrench size 19		1.5	13 11 419	**20.90**

For detailed information on anchor sleeve application please refer to the respective Instructions for Assembly and Use.
Instruction videos and further information at www.alfix-systems.com.

BRACKETS

1a

1c

1d

2c

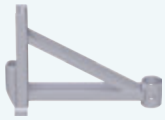

03

04

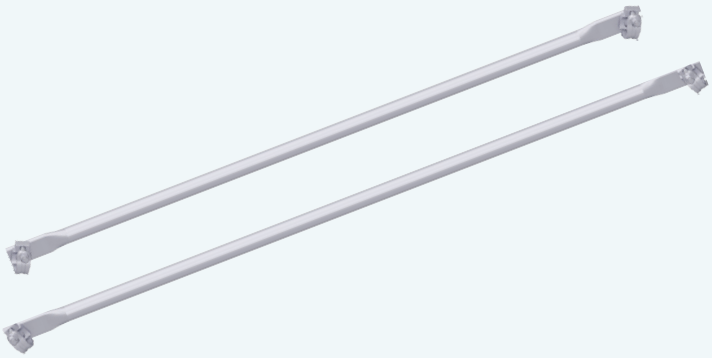

06

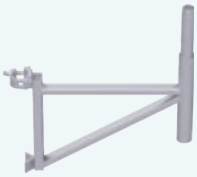

05

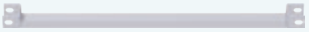

07

APPLICATION EXAMPLE
2a BRACKET WITHOUT TUBE CONNECTOR

APPLICATION EXAMPLE
04 INTERNAL CORNER BRACKET

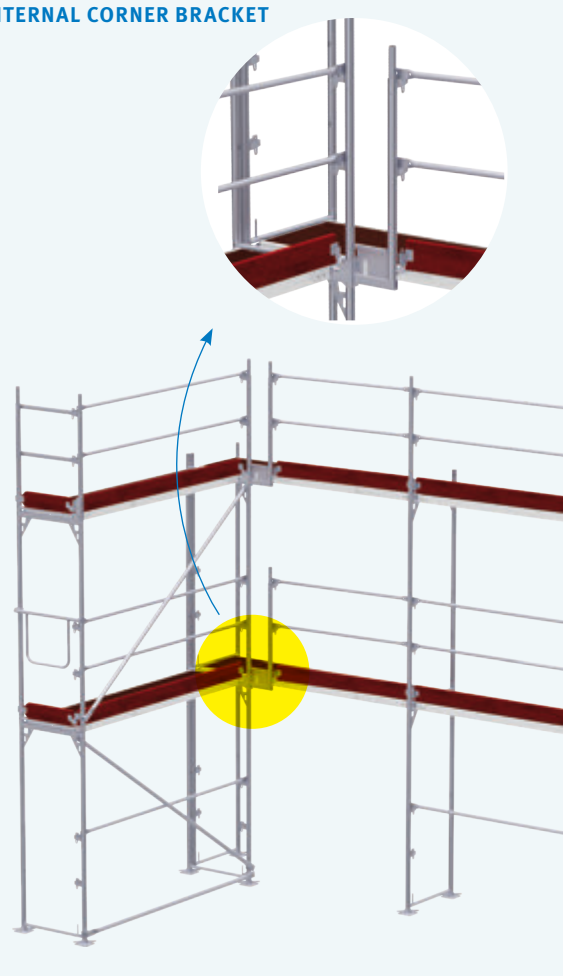

APPLICATION EXAMPLE
06 DIAGONAL CROSS BRACE 1.77 m for bracing the assembly frame and bracket support

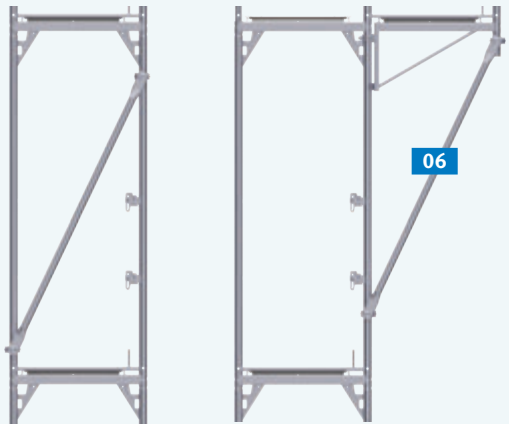

FIG.	DESCRIPTION		LENGTH [m]	WEIGHT approx. [kg]	ARTICLE NO.	PRICE [€]
01	**Bracket** ⊕ steel, hot-dip galvanised — with U-profile for system decks — for widening scaffolding bays / converting projecting building parts	1a	0.36	3.7	10 30 036	**29.60**
		1b (not shown)	0.50	4.5	10 30 050	**38.80**
		1c	0.73	6.7	10 30 073	**39.30**
		1d	1.09	7.0	10 30 109	**88.80**
02	**Bracket** ⊕ steel, hot-dip galvanised — see pos. 01	2a without tube connector (not shown)	0.24	2.5	10 30 024	**26.70**
		2b without tube connector (not shown)	0.36	3.0	10 30 037	**29.60**
		2c without tube connector	0.73	5.0	10 30 081	**42.10**
03	**Bracket, special design** steel, hot-dip galvanised — for transitions from 1.09 m to 0.73 m and 0.73 m to 0.37 m — see page 8 for application example		0.36	2.9	10 49 036	**40.25**
04	**Internal corner bracket** ⊕ steel, hot-dip galvanised, with linchpin — for barrier-free access to inner corners in façade scaffolding — facilitates the use of system-compatible components for side protection instead of using tube coupling devices		0.27	3.2	10 49 025	**39.60**
05	**Bracket 0.50 m** ⊕ steel, hot-dip galvanised — for extending or shortening the scaffolding bay within the grid dimension by 0.50 m sections — The use of a ALFIX transom (see p. 22) is required for accommodating the 0.50 m frame platform with fixture for U-profiles.		0.50	5.0	10 49 050	**38.80**
06	**Diagonal cross brace** ⊕ steel tube ø 42.4 mm, hot-dip galvanised — to support the bracket when used as brick guard or in case it is structurally required, e.g. for bracing the assembly frames in transversal direction	for bracket 0.73 m	1.77	4.8	11 28 719	**38.80**
		for bracket 1.09 m	1.95	5.2	11 28 119	**40.80**
07	**Lift-off preventer for bracket** steel, hot-dip galvanised		0.36	0.9	10 48 036	**10.20**
			0.50	1.2	10 48 050	**11.80**
			0.73	1.5	10 48 073	**13.10**
			1.09	2.3	10 48 109	**17.00**

APPLICATION EXAMPLE
1c BRACKET 0.73 m

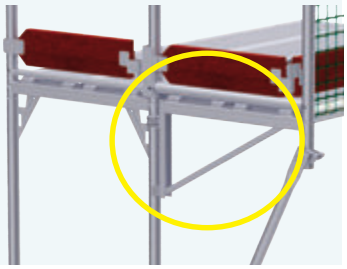

APPLICATION EXAMPLE
05 BRACKET 0.50 m for extending or shortening the scaffolding bay

LATTICE GIRDERS

1a

2a

03

04

APPLICATION EXAMPLE 04 SUSPENSION for 01 LATTICE GIRDER and 02 LATTICE GIRDER CROSS BRACE

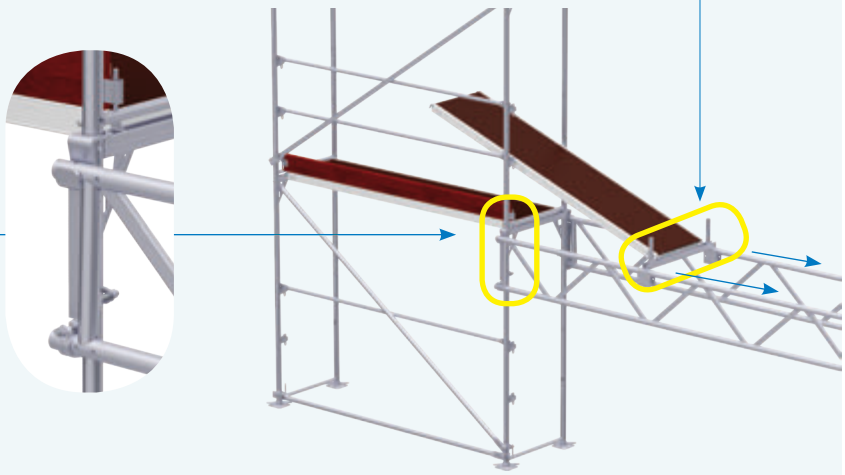

05

06

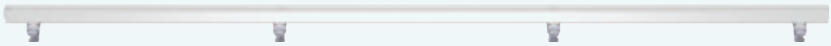

07

APPLICATION EXAMPLE 01 LATTICE GIRDER and 02 LATTICE GIRDER CROSS BRACE

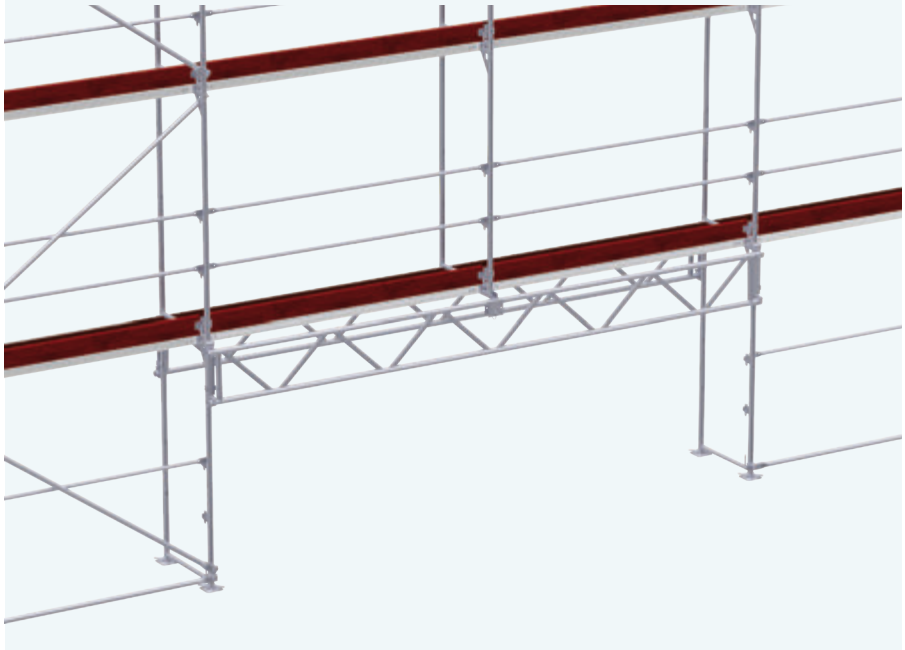

APPLICATION EXAMPLE
06 WALL CONNECTOR PLATE for
01 LATTICE GIRDER

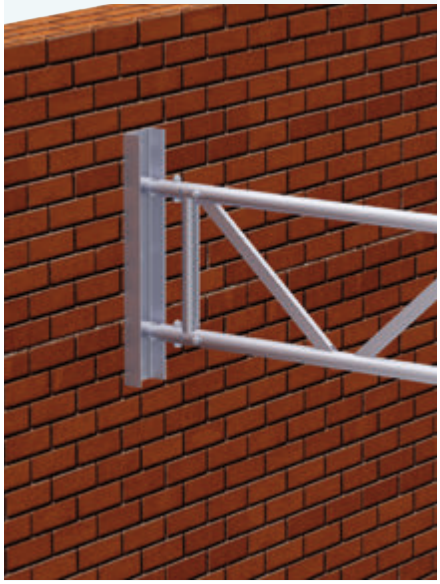

FIG.	DESCRIPTION		DIMENSIONS L/H×W [m]	WEIGHT approx. [kg]	ARTICLE NO.	PRICE [€]
01	**Lattice girder** ⊕ tube ø 48.3 mm — for use in façade scaffolding for construction-related bridging purposes — load-bearing capacity depending on material and bridging length — For loading tables see respective approval or Instructions for Assembly and Use.	1a steel hot-dip galvanised	3.20 × 0.45	31.9	13 75 320	**148.50**
			4.20 × 0.45	41.1	13 75 420	**180.60**
			5.20 × 0.45	50.3	13 75 520	**223.40**
			6.20 × 0.45	59.6	13 75 620	**255.40**
			7.77 × 0.45	73.9	13 75 706	**300.40**
		1b aluminium (not shown)	3.20 × 0.45	12.8	13 70 320	**157.60**
			4.20 × 0.45	16.5	13 70 420	**198.50**
			5.20 × 0.45	20.2	13 70 520	**244.50**
			6.20 × 0.45	23.8	13 70 620	**285.80**
			8.20 × 0.45	31.2	13 70 820	**362.20**
02	**Lattice girder cross brace** ⊕ steel, hot-dip galvanised — U-profile for accommodating system decks with linchpin 12 x 70 mm for safe attachment — suitable for bridging within the façade scaffolding — suitable for system-independent lattice girders instead of half-frames	2a	0.73	7.0	13 81 073	**58.90**
		2b reinforced (not shown)	1.09	8.2	13 81 109	**80.60**
03	**Tube connector for lattice girder** steel, hot-dip galvanised, with four screws M 14 x 60 mm		0.41	1.5	13 88 030	**21.30**
04	**Lattice girder suspension** ⊕ — fitting of system-independent lattice girders to the assembly frames for standard bridging functions		0.53	3.2	13 85 000	**35.95**
05	**Attachment piece for lattice girder** with borehole for locking pin		0.30	2.5	13 75 000	**27.15**
06	**Wall connector plate for lattice girder** ⊕ steel, hot-dip galvanised, version with U-profile 120 mm — for fitting lattice girders at the at the end sides of the building (axis dimension 400 mm), mainly for special solutions — fitting in accordance with anchorage ground and load — verification required for each individual case		0.70	6.8	13 90 001	**72.40**
07	**U-profile, aluminium** with halfcouplers — U-profile for accommodating system decks, must be screwed onto to the lattice girder upper chord — predominantly used for constructing areal scaffoldings		2.00	4.7	13 80 200	**60.35**
			3.00	6.8	13 80 300	**92.30**
			4.00	8.9	13 80 400	**115.10**
			5.00	11.0	13 80 500	**146.60**
			6.00	13.1	13 80 600	**173.50**
	Other sizes available upon request.		per m		13 80 000	**30.80**

ALUMINIUM BRIDGING DECKS

1a

GUARDRAIL DIMENSIONS FOR ALUMINIUM BRIDGING DECKS

Bridging decks [m]	Guardrail dimensions [m]
4.00	2 × 1.57
5.00	2 × 2.07
6.00	2 × 2.57
7.00	2 × 3.07
8.00	1 × 2.07 2 × 2.57
9.00	1 × 3.07 2 × 2.57
10.00	3 × 3.07

02

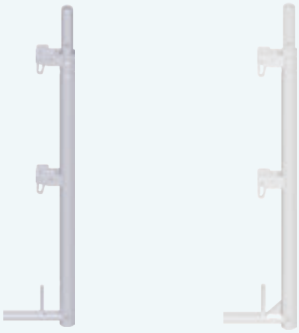

3a 3b

05

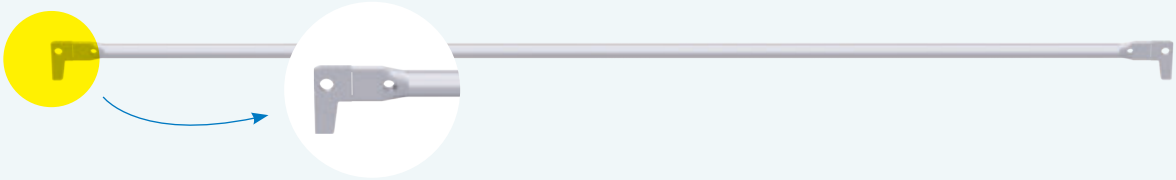

06

07

APPLICATION EXAMPLE

08 CLAMP COUPLER (UNIVERSAL DESIGN)

as tilt protection for

01 ALUMINIUM BRIDGING DECK

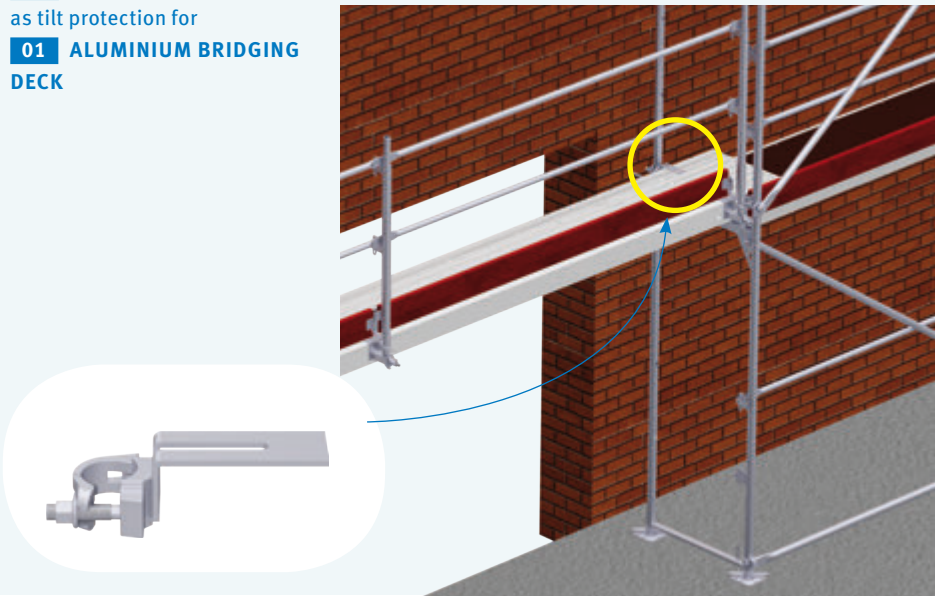

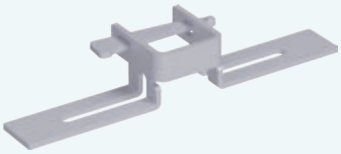

09

FIG.	DESCRIPTION		DIMENSIONS L/H×W [m]	WEIGHT approx. [kg]	ARTICLE NO.	PRICE [€]
01	**Aluminium bridging deck** ⊕ — 150 kg single load or 100 kg/m² working weight per unit area, suitable for all scaffolding systems — to fasten threaded rod and guardrail holder to assemble side protection — must be secured to the assembly frame by means of clamp coupler, for accommodating the required guardrail holders	1a height 0.12 m	4.00 × 0.53	23.3	32 00 400	**511.00**
			5.00 × 0.53	28.5	32 00 500	**695.20**
			6.00 × 0.53	33.8	32 00 600	**802.10**
			7.00 × 0.53	39.0	32 00 700	**923.80**
		1b height 0.14 m (not shown)	8.00 × 0.53	68.3	32 00 800	**1,141.20**
			9.00 × 0.53	76.4	32 00 900	**1,271.40**
			10.00 × 0.53	84.4	32 00 001	**1,395.30**
02	**Guardrail holder** ⊕ steel, hot-dip galvanised — for receiving single guardrail posts and side protection components of the façade scaffolding		0.25	1.8	32 01 002	**17.35**
03	**Guardrail post, single** ø 48.3 mm see pages 20/21 for prices and details	3a steel tube hot-dip galvanised	1.00	5.4	10 65 100L	**27.10**
		3b aluminium	1.00	2.8	10 54 000	**36.80**
04	**Threaded rod** ⊕ steel, hot-dip galvanised, ø 15.1 mm (not shown) — for fastening guardrail holders — longer versions are used for connecting several aluminium bridging decks in transverse direction	for 1 bridging deck	0.90	1.4	32 02 001	**11.05**
		for 2 bridging decks	1.44	2.2	32 02 002	**16.25**
		for 3 bridging decks	1.97	3.0	32 02 003	**20.90**
		for 4 bridging decks	2.50	3.8	32 02 004	**26.40**
05	**Flanged wing nut 8T** ø 70 mm, for threaded rod ø 15.1 mm			0.5	32 03 000	**6.10**
06	**Guardrail** steel tube ø 33.7 mm, hot-dip galvanised see pages 18/19 for prices and details		1.57	3.4	10 60 157	**14.60**
			2.07	4.4	10 60 207	**15.70**
			2.57	5.2	10 60 257	**16.90**
			3.07	5.7	10 60 307	**18.00**
07	**Toeboard, wood** with claws, standard height 15 cm see pages 22/23 for prices and details		1.57	4.0	12 50 157	**14.10**
			2.07	5.0	12 50 207	**15.10**
			2.57	6.5	12 50 257	**16.30**
			3.07	7.5	12 50 307	**17.70**
08	**Clamp coupler, universal design** ⊕		0.20	1.1	13 17 019	**21.35**
09	**Double clamp coupler with wedge**			1.2	13 17 030	**21.05**

APPLICATION EXAMPLE:

- 01 Aluminium bridging deck
- 02 Guardrail holder
- 03 Guardrail post, single
- 04 Threaded rod
- 05 Flanged wing nut 8T
- 07 Toeboard, wood

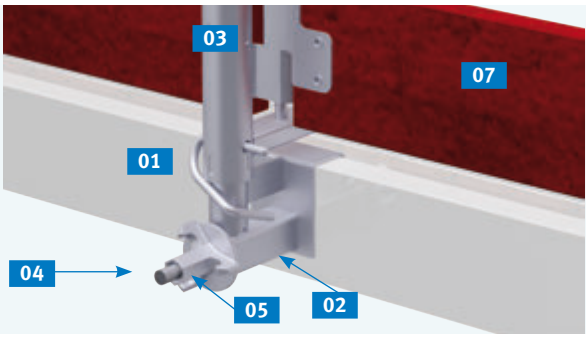

COUPLERS


01


02


03


4a


4b

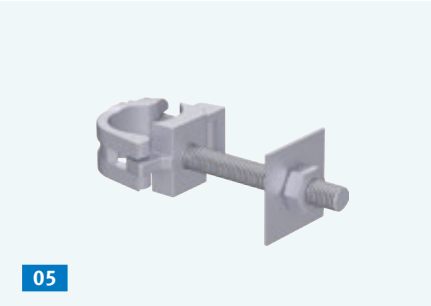
05


06


07

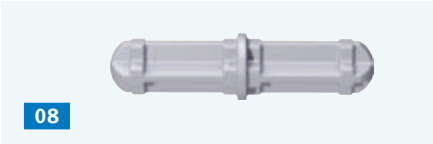
08


09


10


11

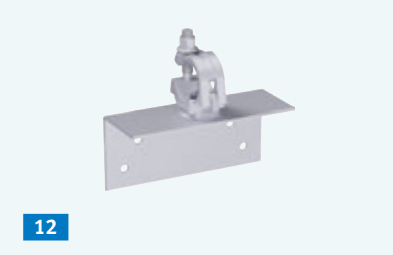
12


13


14


15

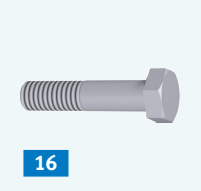
16

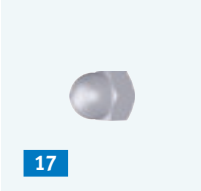
17

APPLICATION EXAMPLE
13 HALFCOUPLER WITH HOOK USED AS V-ANCHOR

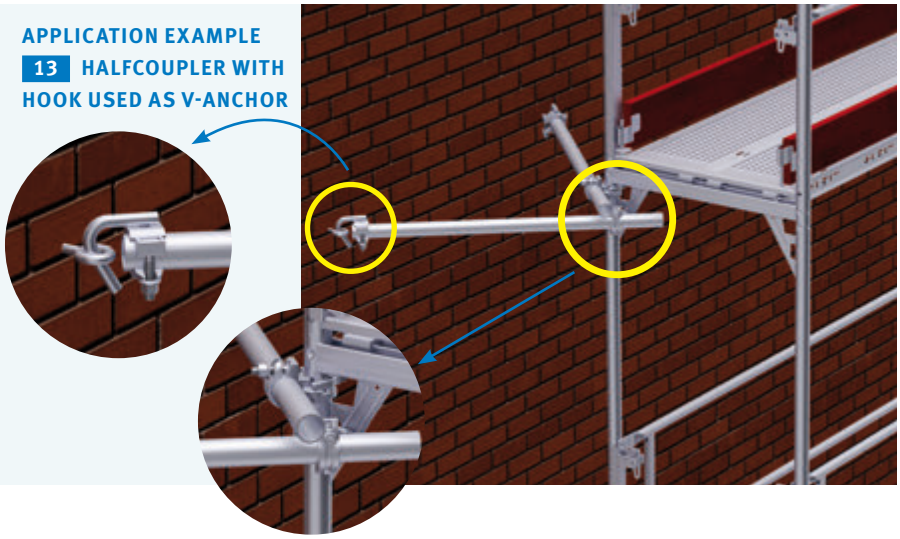

APPLICATION EXAMPLE
06 CLAW COUPLER,
always fitted in pairs

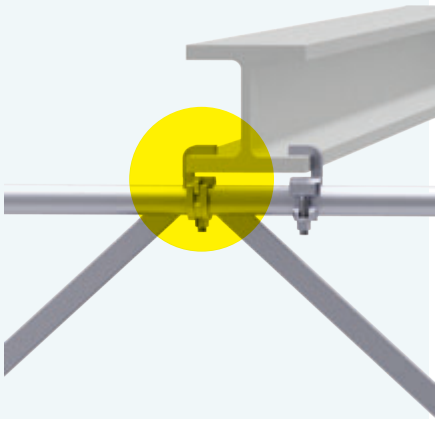

FIG.	DESCRIPTION		DIMENSIONS L/H×W [m]	WEIGHT approx. [kg]	ARTICLE NO.	PRICE [€]
01	**Standard coupler** with collar nuts, for tubes ø 48.3 mm	wrench size 19	48 / 48	1.0	13 01 019	**8.70**
02	**Swivel coupler** with collar nuts, for tubes ø 48.3 mm	wrench size 19	48 / 48	1.0	13 03 019	**10.80**
03	**Halfcoupler**	wrench size 19	48 / –	0.6	13 02 019	**8.60**
04	**Guardrail coupler** 4a with wedge coupler		48 / –	1.3	13 09 030	**15.60**
	4b with halfcoupler	wrench size 19	48 / –	1.3	13 09 019	**15.60**
05	**Combination coupler** threaded bolt M16 x 120 mm, incl. coupling plate 60 x 60 and nut M16 DIN 934	wrench size 19	48 / –	0.5	13 04 019	**15.60**
06	**Claw coupler** ⊕ effective width 35 mm	wrench size 19	48 / –	0.9	13 10 019	**14.70**
07	**Universal tube connector, clampable** consists of 2 half-shells and a screw – for connecting tubes subject to impact stress, expanded by the screw – length 0.24 m			1.7	13 08 001	**11.05**
08	**Tube connector** for tension coupler			1.0	13 08 000	**5.40**
09	**Tension coupler** with collar nuts, for tubes ø 48.3 mm	wrench size 19	48 / 48	1.4	13 07 019	**14.00**
10	**Halfcoupler with toeboard bolt**	wrench size 19	48 / –	0.6	13 13 019	**14.30**
11	**Gusset coupler** ⊕	wrench size 19	48 / –	0.8	13 06 319	**11.05**
12	**Squared timber coupler** with swivel halfcoupler – with metal bracket (100 x 220 x 80 mm)	wrench size 19	48 / –	1.8	33 81 019	**19.10**
13	**Halfcoupler with hook** ⊕	wrench size 19	48 / –	0.9	13 06 019	**13.70**
14	**Anchor coupler**	wrench size 19	48 / –	0.9	13 06 119	**12.65**
15	**Standard reduction coupler**	wrench size 19	48 / 34	1.0	13 11 019	**16.50**
16	**Hexagon bolt** M 14 x 65 8.8 galvanised – serves as safety bolt when used in conjunction with 17 hexagon dimed cap nut			0.1	14 53 000	**1.00**
17	**Hexagon dimed cap nut** M14, galvanised			0.04	73 02 003	**1.25**

Couplers are approved by the respective manufacturer and in accordance with EN 74 standard.

APPLICATION EXAMPLE
11 GUSSET COUPLER

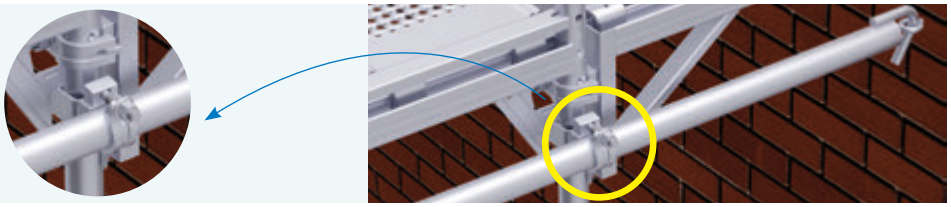

FAÇADE SCAFFOLDING ACCESSORIES

01

02

03

APPLICATION EXAMPLE

04 TEMPORARY ROOF SUPPORT

04

FIG.	DESCRIPTION	DIMENSIONS L/H×W [m]	WEIGHT approx. [kg]	ARTICLE NO.	PRICE [€]
01	**Bracket for pulley** with halfcoupler and fixture for pulley, steel, hot-dip galvanised — design as with bracket 0.73 m — with welded-on fixture for pulleys	0.73	6.7	10 49 073	**48.20**
02	**Pulley** — with cross-bar and rotatable load hook with hook protection or with carabiner — suitable for ropes up to ø 28 mm, up to max. 200 kg load	ø 190 mm	2.3	37 83 000	**71.05**
03	**Temporary roof extension** ⊕ steel, hot-dip galvanised — for use in conjunction with bracket and diagonal cross brace — by vertically installing system decks a protective wall can be created — for installation at any height — For appropriate anchoring see the respective Instructions for Assembly and Use (page 25).	0.46 × 0.66	4.1	10 71 000	**40.20**
04	**Temporary roof support** ⊕ steel, hot-dip galvanised	3.00 × 0.60	14.8	10 71 010	**146.00**

APPLICATION EXAMPLE
03 TEMPORARY ROOF EXTENSION

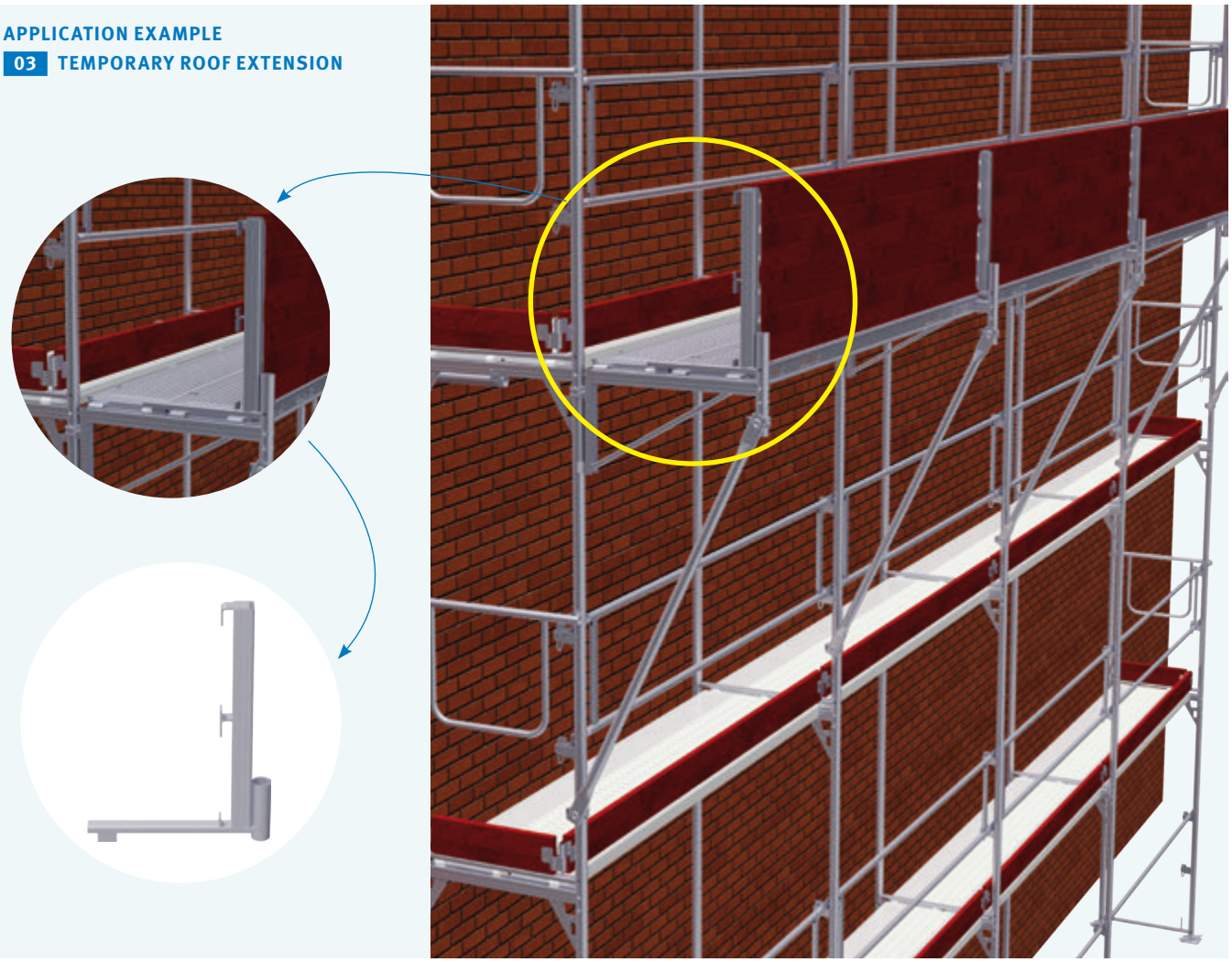

FAÇADE SCAFFOLDING ACCESSORIES

03

01

02

APPLICATION EXAMPLE

03 TELESCOPIC SCAFFOLD STABILISER

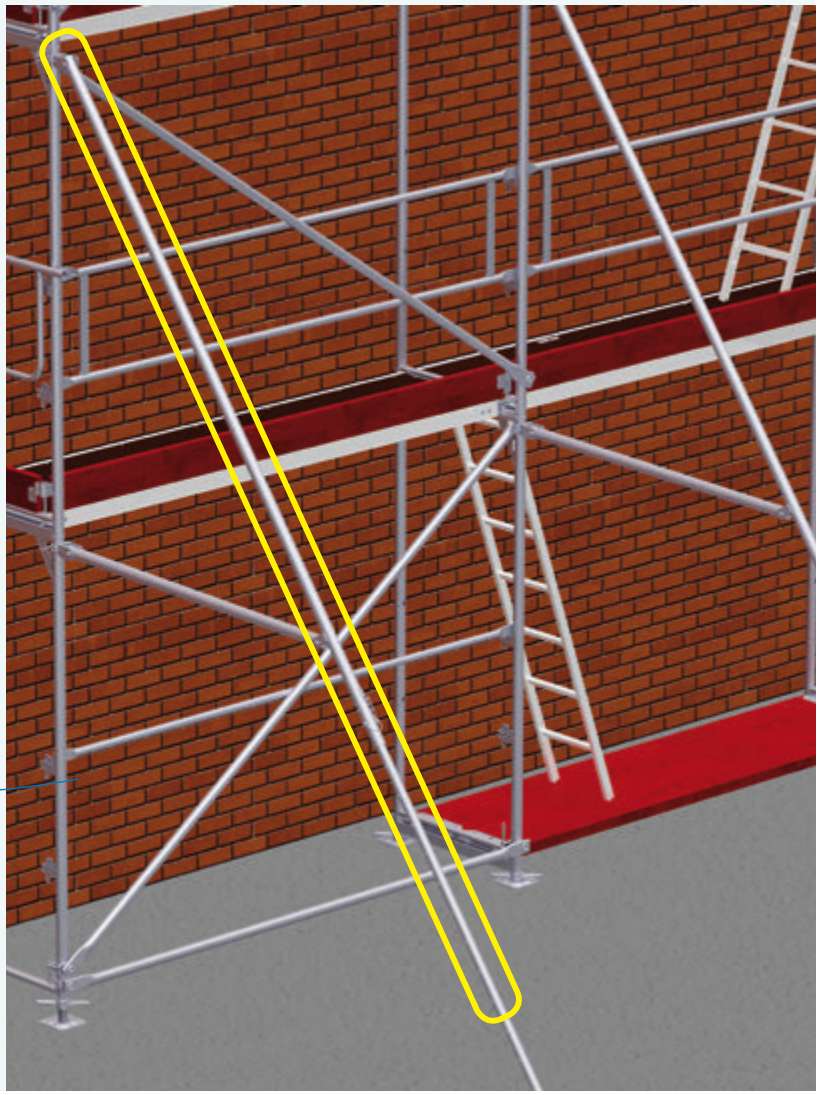

04

FIG.	DESCRIPTION	DIMENSIONS L/H×W [m]	WEIGHT approx. [kg]	ARTICLE NO.	PRICE [€]
01	**Scaffold tube, steel** ø 48.3 x 3.25 mm, hot-dip galvanised	1.00	3.5	13 51 100	**11.00**
		2.00	7.0	13 51 200	**20.80**
		3.00	10.5	13 51 300	**31.20**
		4.00	14.0	13 51 400	**42.10**
		5.00	17.5	13 51 500	**50.70**
		6.00	21.0	13 51 600	**59.00**
02	**Scaffold tube, aluminium** ø 48.3 × 4.05 mm	1.00	1.5	13 40 100	**13.50**
		2.00	3.0	13 40 200	**27.10**
		3.00	4.5	13 40 300	**40.60**
		4.00	6.0	13 40 400	**54.30**
		5.00	7.5	13 40 500	**67.70**
		6.00	9.0	13 40 600	**78.40**
03	**Telescopic scaffold stabiliser** ⊕ steel tube ø 48.3 mm, hot-dip galvanised — transport length 3.2 m, extension length 3.0 m – 5.0 m — to stabilise free-standing scaffoldings with assembly heights of up to 6.20 m — also ensures safe connection to the scaffolding due to bracing effect — linchpin to provide secure locking at various extension lengths — base plate pegged into the ground (with two ground pegs)		28.0	13 63 500	**170.80**
04	**Ground peg** ⊕ steel ø 25mm, non-galvanised	0.48	2.0	61 00 000	**13.10**

APPLICATION EXAMPLE
Linchpin to provide secure locking at various extension lengths

APPLICATION EXAMPLE
04 GROUND PEG

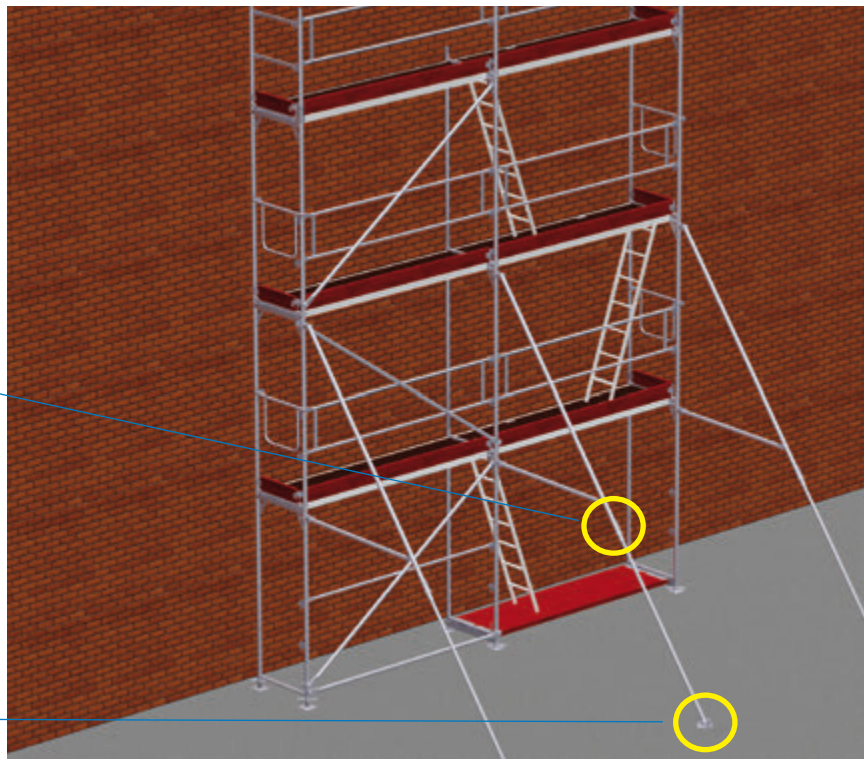

FAÇADE SCAFFOLDING ACCESSORIES

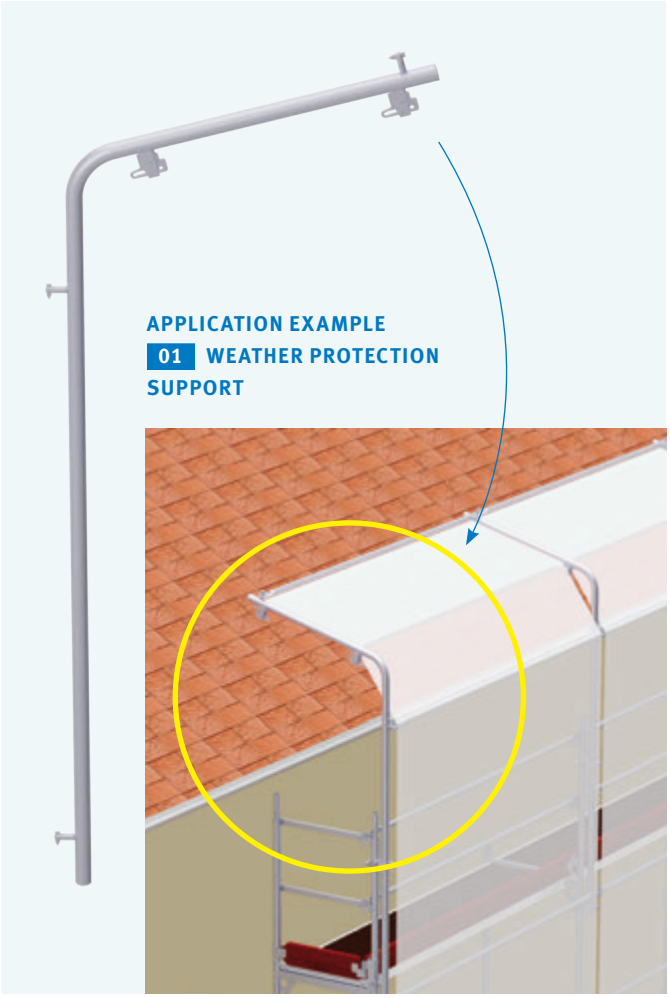

APPLICATION EXAMPLE 01 WEATHER PROTECTION SUPPORT

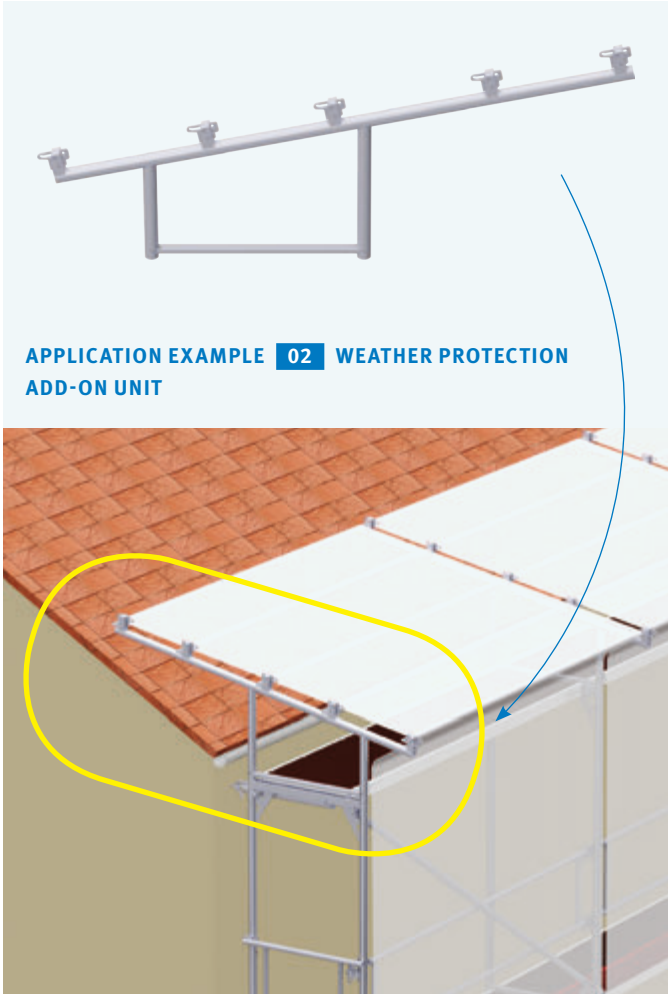

APPLICATION EXAMPLE 02 WEATHER PROTECTION ADD-ON UNIT

APPLICATION EXAMPLE 03 TRESTLE

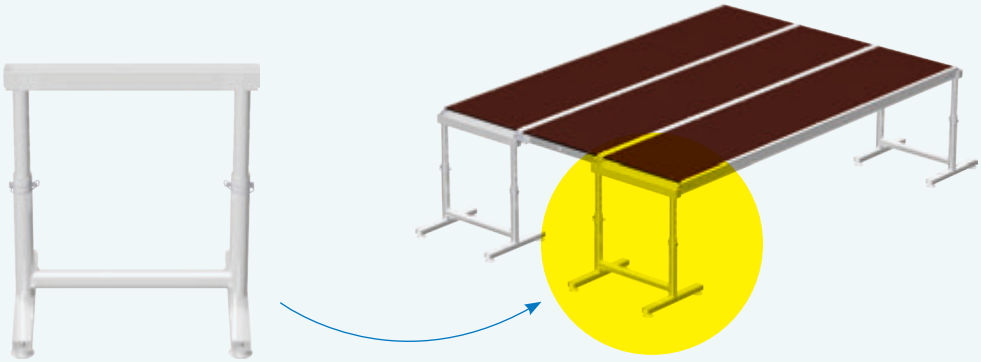

03

04

05

06

FIG.	DESCRIPTION	DIMENSIONS L/H×W [m]	WEIGHT approx. [kg]	ARTICLE NO.	PRICE [€]
01	**Weather protection support** ⊕ steel, hot-dip galvanised — weather protection add-on unit for façade scaffoldings — weather protection posts can be connected to each other using guardrails	2.00	14.3	10 71 200	**83.70**
02	**Weather protection add-on unit** ⊕ steel, hot-dip galvanised — to be fitted onto assembly frames with system width 0.73 m — weather protection add-on units can be connected to each other using guardrails — roof element for accommodating scaffolding protection tarpaulins (see Accessories Catalogue) — fastening of the scaffolding protection tarpaulins by means of toggle/ disposable ties	2.00	18.0	10 71 201	**108.75**
03	**Trestle** ⊕ height adjustable 0.44 m - 0.67 m, aluminium — with U-profile for system deck suspension — four trestles allow for suspending three aluminium frame platforms (in parallel)	0.44 - 0.67 × 0.65	4.2	33 20 000	**93.70**
04	**Recess bracket starting piece**	0.35	1.7	14 40 000	**6.10**
05	**Recess bracket holder** ⊕ with integrated halfcoupler, for all scaffolding systems up to width class W06 (0.65 m) and W09 (1.00 m), wrench size 19	0.70	2.3	14 51 060	**31.55**
		1.00	2.9	14 51 100	**38.10**
06	**Linchpin** steel, galvanised, 8 x 60 mm, with snap-on lock		0.15	30 06 250	**1.20**

APPLICATION EXAMPLE 05 RECESS BRACKET HOLDER

Two recess bracket holders are fitted to the decks of each level by means of a tensioning screw. Recess bracket holders can be used for each deck type. The holders must be arranged such that the niche is closed with a suitable deck and that any remaining gaps must not exceed 30 cm. The recess bracket holders features halfcouplers which serve to vertically fit standards for two or more levels, which accommodate the brackets at the respective height.

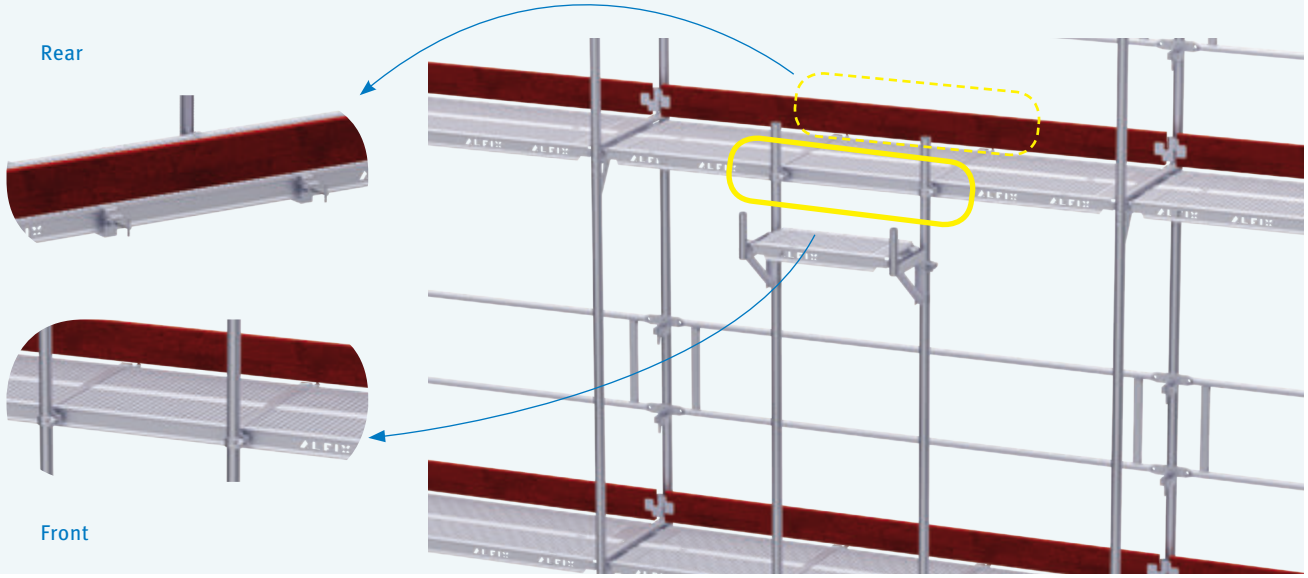

FALL PROTECTION EQUIPMENT

1c

1a

1b

APPLICATION EXAMPLE 1a ADVANCED GUARDRAIL POST
with convenient foot release mechanism

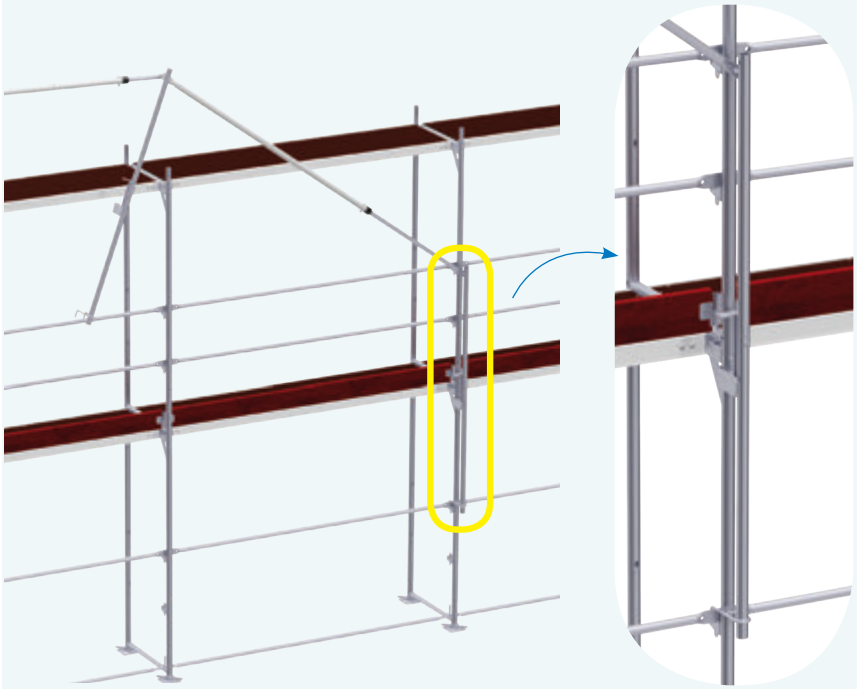

2b

03

04

FIG.	DESCRIPTION	DIMENSIONS L/H×W [m]	WEIGHT approx. [kg]	ARTICLE NO.	PRICE [€]
01	**Advanced side protection** ⊕ — consists of guardrail post, end guardrail and telescopic guardrail — for a high level of safety during assembly / dismantling — can be used for all compatible scaffolding systems — Please follow the Instructions for Assembly and Use and the provisions of the employer's liability insurance association for construction sites (BG Bau) to ensure proper use.				
	1a Advanced guardrail post steel, hot-dip galvanised	2.00	6.2	14 43 100	**47.25** Special net price
	1b Advanced end guardrail steel, hot-dip galvanised — with lift-off prevention	0.73	9.0	14 43 301	**98.40** Special net price
	1c Advanced telescopic guardrail aluminium and steel, hot-dip galvanised — incl. linchpin with snap-on lock for transport security (undetachable)	2.50 – 3.07	7.9	14 43 200	**54.25** Special net price
02	**Safety helmet with chin strap**	2a white (without fig.)	0.4	37 50 018	**73.85**
		2b yellow	0.4	37 50 024	**73.85**
03	**Personal fall protection equipment kit (PPE)** EN 354 / 355 / 361 / 363, sharp-edge tested — with special carabiners to suit scaffolding use — delivered in a functional PVC bag — Revolution R2 Scaff harness 2.50 m, safety rope Manyard Edge — with Pivot Link™ attachment point at waist level to securely attach accessories, e.g. 04 ratchet spanner holster			37 67 009	**308.45** Special net price
04	**Ratchet spanner holster** — with Pivot Link™ attachment point for secure attachment to the safety harness			37 50 017	**17.15**

APPLICATION EXAMPLE
1b ADVANCED END GUARDRAIL WITH LIFT-OFF PREVENTER

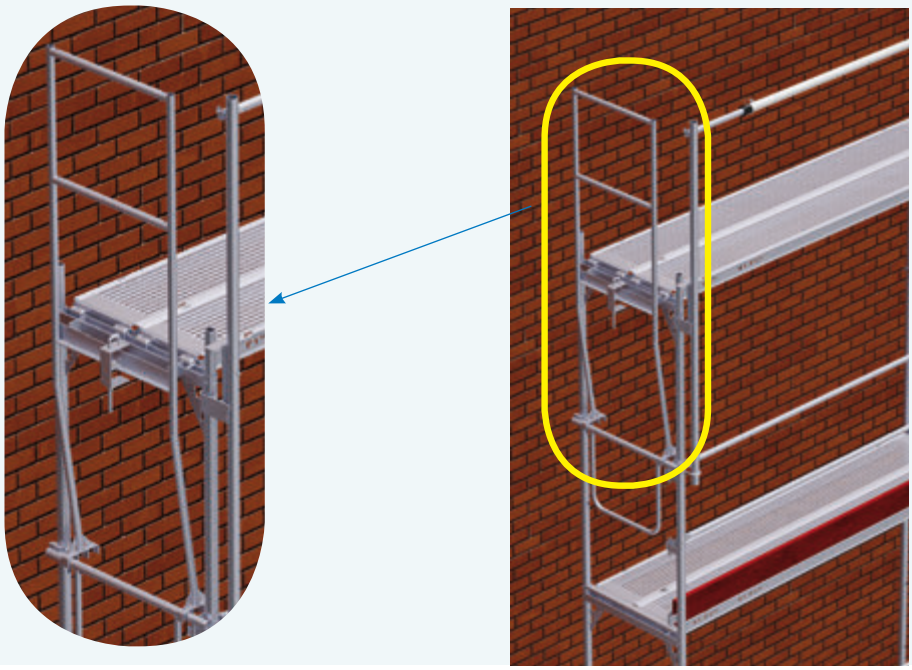

SCAFFOLDING EXAMPLES

ALFIX façade scaffolding 0.73 m according to the price list / Bay length of scaffold: 3.07 m

3.07 m	SCAFFOLD LENGTH X WORKING HEIGHT		12.28 × 8.20	21.49 × 10.20	30.70 × 10.20	39.91 × 10.20	49.12 × 10.20	98.24 × 10.20
	WORK AREA (m²)		**101**	**219**	**313**	**407**	**501**	**1002**
BASIC COMPONENTS	Base jack 0.40 m	11 51 040	10	16	22	28	34	66
	Assembly frame 2.00 x 0.73 m	10 11 200L	15	32	44	56	68	132
	Wooden deck 3.07 x 0.32 m	12 31 307	24	56	80	104	128	256
	Guardrail 3.07 m	10 60 307	28	63	90	117	145	290
	Double end guardrail 0.73 m	10 62 073	4	6	6	6	6	6
	Diagonal brace 3.60 m	11 00 360	3	8	8	12	16	28
	Guardrail post 0.73 m	10 64 073L	3	6	9	12	15	31
	End guardrail frame 0.73 m	10 63 073L	2	2	2	2	2	2
	Toeboard 3.07 m, wood	12 50 307	12	28	40	52	64	128
	End toeboard 0.73 m, wood	12 51 073	6	8	8	8	8	8
	TOTAL PRICE (€)		**3,832.30**	**8,256.40**	**11,404.30**	**14,685.40**	**17,984.50**	**35,190.90**
	PRICE PER sqm (€ per m²)		**37.94**	**37.70**	**36.44**	**36.08**	**35.90**	**35.12**
	WEIGHT (kg)		**1,255.9**	**2,778.6**	**3,883.2**	**5,019.4**	**6,162.6**	**12,155.6**
ANCHORING	Quick-release anchor	13 62 065	8	15	18	21	24	43
	Standard coupler	13 01 019	8	15	18	21	24	43
	Multipurpose plug 14 x 70 mm	37 00 000	8	15	18	21	24	43
	Ring screw 12 x 120 mm	37 02 120	8	15	18	21	24	43
	Cap	37 01 001	8	15	18	21	24	43
	TOTAL PRICE (€)		**189.20**	**354.75**	**425.70**	**496.65**	**567.60**	**1,016.95**
	WEIGHT (kg)		**27.2**	**51.0**	**61.2**	**71.4**	**81.6**	**146.2**
SCAFFOLD ACCESS	Access deck with ladder (film-coated plywood decking) 3.07 × 0.60 m	12 04 307	3	4	4	4	4	4
	SURCHARGE (€)		**528.90**	**705.20**	**705.20**	**705.20**	**705.20**	**705.20**
	WEIGHT REDUCTION (kg)		**68.4**	**91.2**	**91.2**	**91.2**	**91.2**	**91.2**
ALTERNATIVE SCAFFOLDING DECKS	Aluminium frame platform 3.07 × 0.60 m	12 01 307	12	28	40	52	64	128
	SURCHARGE (€)		**508.80**	**1,187.20**	**1,696.00**	**2,204.80**	**2,713.60**	**5,427.20**
	WEIGHT REDUCTION (kg)		**320.4**	**747.6**	**1,068.0**	**1,388.4**	**1,708.8**	**3,417.6**
	Steel deck 3.07 × 0.32 m	12 21 307	24	56	80	104	128	256
	SURCHARGE (€)		**286.80**	**669.20**	**956.00**	**1,242.80**	**1,529.60**	**3,059.20**
	WEIGHT REDUCTION (kg)		**60.0**	**140.0**	**200.0**	**260.0**	**320.0**	**640.0**
ASSEMBLY FRAME, ALUMINIUM	Assembly frame, aluminium 2.00 × 0.73 m	10 00 200	15	32	44	56	68	132
	SURCHARGE (€)		**519.00**	**1,107.20**	**1,522.40**	**1,937.60**	**2,352.80**	**4,567.20**
	WEIGHT REDUCTION (kg)		**183.0**	**390.4**	**536.8**	**683.2**	**829.6**	**1.610.4**

ALFIX façade scaffolding 0.73 m according to the price list / Bay length of scaffold: 2.57 m

2.57 m	SCAFFOLD LENGTH X WORKING HEIGHT		12.85 × 8.20	20.56 × 10.20	30.84 × 10.20	41.12 × 10.20	48.83 × 10.20	100.23 × 10.20
	WORK AREA (m²)		**105**	**210**	**315**	**419**	**498**	**1022**
BASIC COMPONENTS	Base jack 0.40 m	11 51 040	12	18	26	34	40	80
	Assembly frame 2.00 x 0.73 m	10 11 200L	18	36	52	68	80	160
	Wooden deck 2.57 × 0.32 m	12 31 257	30	64	96	128	152	312
	Guardrail 2.57 m	10 60 257	35	72	108	144	171	351
	Double end guardrail 0.73 m	10 62 073	4	6	6	6	6	6
	Diagonal brace 3.20 m	11 00 320	3	8	12	16	16	32
	Guardrail post 0.73 m	10 64 073L	4	7	11	15	18	38
	End guardrail frame 0.73 m	10 63 073L	2	2	2	2	2	2
	Toeboard 2.57 m, wood	12 50 257	15	32	48	64	76	156
	End toeboard 0.73 m, wood	12 51 073	6	8	8	8	8	8
	TOTAL PRICE (€)		**4,339.00**	**8,662.50**	**12,671.30**	**16,680.10**	**19,593.10**	**39,512.30**
	PRICE PER sqm (€ per m²)		**41.32**	**41.25**	**40.23**	**39.81**	**39.34**	**38.66**
	WEIGHT (kg)		**1,337.2**	**2,724.4**	**4,017.60**	**5,310.80**	**6,258.80**	**12,695.60**
ANCHORING	Quick-release anchor	13 62 065	8	16	20	24	28	55
	Standard coupler	13 01 019	8	16	20	24	28	55
	Multipurpose plug 14 x 70 mm	37 00 000	8	16	20	24	28	55
	Ring screw 12 x 120 mm	37 02 120	8	16	20	24	28	55
	Cap	37 01 001	8	16	20	24	28	55
	TOTAL PRICE (€)		**189.20**	**378.40**	**473.00**	**567.60**	**662.20**	**1,300.75**
	WEIGHT (kg)		**27.2**	**54.4**	**68.0**	**81.6**	**95.2**	**187.0**
SCAFFOLD ACCESS	Access deck with ladder (film-coated plywood decking) 2.57 × 0.60 m	12 04 257	3	4	4	4	4	4
	SURCHARGE (€)		**465.30**	**620.40**	**620.40**	**620.40**	**620.40**	**620.40**
	WEIGHT REDUCTION (kg)		**55.5**	**74.0**	**74.0**	**74.0**	**74.0**	**74.0**
ALTERNATIVE SCAFFOLDING DECKS	Aluminium frame platform 2.57 × 0.60 m	12 01 257	15	32	48	64	76	156
	SURCHARGE (€)		**487.50**	**1,040.00**	**1,560.00**	**2,080.00**	**2,470.00**	**5,070.00**
	WEIGHT REDUCTION (kg)		**336.0**	**716.8**	**1,075.2**	**1,433.6**	**1,702.4**	**3,494.4**
	Steel deck 2.57 × 0.32 m	12 21 257	30	64	96	128	152	312
	SURCHARGE (€)		**333.00**	**710.40**	**1,065.60**	**1,420.80**	**1,687.20**	**3,463.20**
	WEIGHT REDUCTION (kg)		**45.0**	**96.0**	**144.0**	**192.0**	**228.0**	**468.0**
ASSEMBLY FRAME, ALUMINIUM	Assembly frame, aluminium 2.00 × 0.73 m	10 00 200	18	36	52	68	80	160
	SURCHARGE (€)		**622.80**	**1,245.60**	**1,799.20**	**2,352.80**	**2,768.00**	**5,536.00**
	WEIGHT REDUCTION (kg)		**219.6**	**439.2**	**634.4**	**729.6**	**976.0**	**1952.0**

TECHNICAL DETAILS

Load classes of scaffolding decks

SCAFFOLDING DECKS

DESIGNATION	BAY WIDTH L (m)	BRICK GUARD AND ROOF BRICK GUARD APPLICATIONS	ASSIGNMENT OF DECKING TO LOAD CLASSES	
Steel deck 0.32 m	≤ 2.07	permissible	6	
	2.57	permissible	5	
	3.07	permissible	4	
	4.14	permissible	3	
Wooden deck 0.32 m	≤ 1.57	permissible	6	
	2.07	permissible	5	
	2.57	permissible	4	
	3.07	permissible	3	
Solid aluminium deck 0.32 m	≤ 2.07	permissible	6	
	2.57	permissible	5	
	3.07	permissible	4	
	4.14	–	3	
ALBLITZ lightweight deck 0.60 m	1.57	permissible	4	
	2.07	permissible	4	
	2.57	permissible	4	
	3.07	permissible	3	
Frame platform 0.60 m film-coated plywood decking	≤ 3.07	permissible	3	
Access deck with ladder 0.60 m film-coated plywood decking	≤ 3.07	permissible	3	
Access deck with ladder 0.60 m chequer plate decking	2.57	permissible	3	
	3.07	permissible	3	
Access deck without ladder 0.60 m film-coated plywood decking	≤ 3.07	permissible	3	

Parameters of vertical diagonal braces

Extract of approval no. Z-8.22-932

VERTICAL DIAGONAL BRACES

BAY LENGTH (m)	$ß = A_D / A_{eff}$	$D_{R,d}$ (kN)
2.07	44	7.65
2.57	42	6.51
3.07	40	5.37

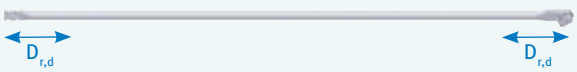

Cross-sectional values of base jacks

The substitute cross-sectional values of base jacks for stress and deformation analyses according to DIN 4425 are to be assumed as follows:

BASE JACK

$A = A_s$	=	3.52 cm²
I	=	4.00 cm⁴
W_{el}	=	2.68 cm³
W_{pl}	=	1.25 × 2.68 = 3.35 cm³

EXTRACTS FROM THE DIN EN 12811 STANDARD

Service loads on working areas

WORKING AREAS

LOAD CLASS	UNIFORMLY DISTRIBUTED LOAD q_1 in kN/m²	CONCENTRATED LOAD ON AREA 500 mm x 500 mm F_1 in kN	CONCENTRATED LOAD ON AREA 200 mm x 200 mm F_2 in kN	PARTIAL AREA LOAD q_2 in kN/m²	PARTIAL AREA LOAD Partial area factor a_p [1])
1	0.75	1.50	1.00	–	–
2	1.50	1.50	1.00	–	–
3	2.00	1.50	1.00	–	–
4	3.00	3.00	1.00	5.00	0.4
5	4.50	3.00	1.00	7.50	0.4
6	6.00	3.00	1.00	10.00	0.5

Headroom classes

WORKING AREAS

CLASS	CLEAR HEADROOM between working areas h_3	CLEAR HEADROOM between working areas and transoms or tie members h_{1a} And h_{1b}	CLEAR HEADROOM clear shoulder height h_2
H_1	$h_3 \geq 1.90$ m	$1.75 \text{ m} \leq h_{1a} \leq 1.90$ m $1.75 \text{ m} \leq h_{1b} \leq 1.90$ m	$h_2 \geq 1.60$ m
H_2	$h_2 \geq 1.90$ m	$h_{1a} \geq 1.90$ m $h_{1b} \geq 1.90$ m	$h_2 \geq 1.75$ m

Width classes

WORKING AREAS

WIDTH CLASS	w in m
W06	$0.6 \leq w \leq 0.9$
W09	$0.9 \leq w \leq 1.2$
W12	$1.2 \leq w \leq 1.5$
W15	$1.5 \leq w \leq 1.8$
W18	$1.8 \leq w \leq 2.1$
W21	$2.1 \leq w \leq 2.4$
W24	$2.4 \leq w$

Headroom and width classes of working areas

b	width of passage clearance, 500 mm is the minimum requirement, and (c - 250 mm)
c	width of clearance between standards
h_{1a}. h_{1b}	width of clearance between working areas and transoms or tie members
h_2	clear shoulder height
h_3	clear height between working areas
p	lear width in the head area; 300 mm is the minimum requirement, and (c - 450 mm)
w	width of working areas

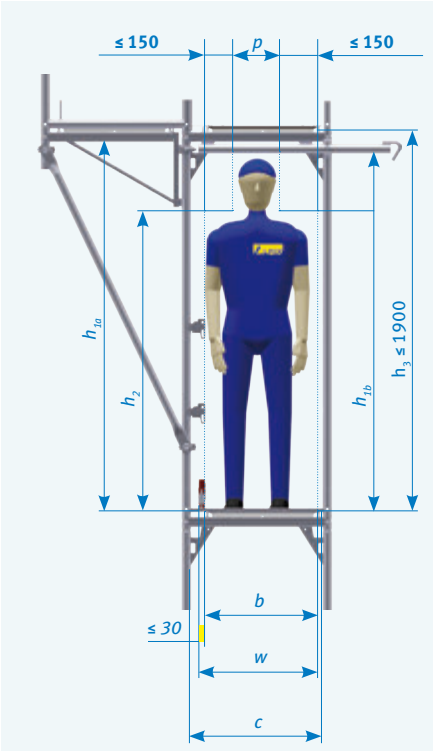

Designation of scaffolds according to the standard EN 12810-1

Example: Scaffold EN 12810 - 3 D - SW06/250 - H1 - B - LA

Scaffold EN 12810	Frame scaffold (system scaffold) according to DIN EN 12810-1
3	Load class 3 (see Table 3 DIN EN 12811-1)
D	Drop tests on platforms (D = with drop test, N = without drop test)
SW06/250	System width class (see Table 1 DIN EN 12811-1) here: between 0.60 m and 0.90 m / bay length 2.50 m
H1	Headroom class (see Table 2 DIN EN 12811-1) headroom class H1 is standard in Germany
B	without cladding (A = without cladding, B = with cladding)
LA	with ladder (LA = ladder, ST = stairway, LS = both)

NOTES

SKETCHES

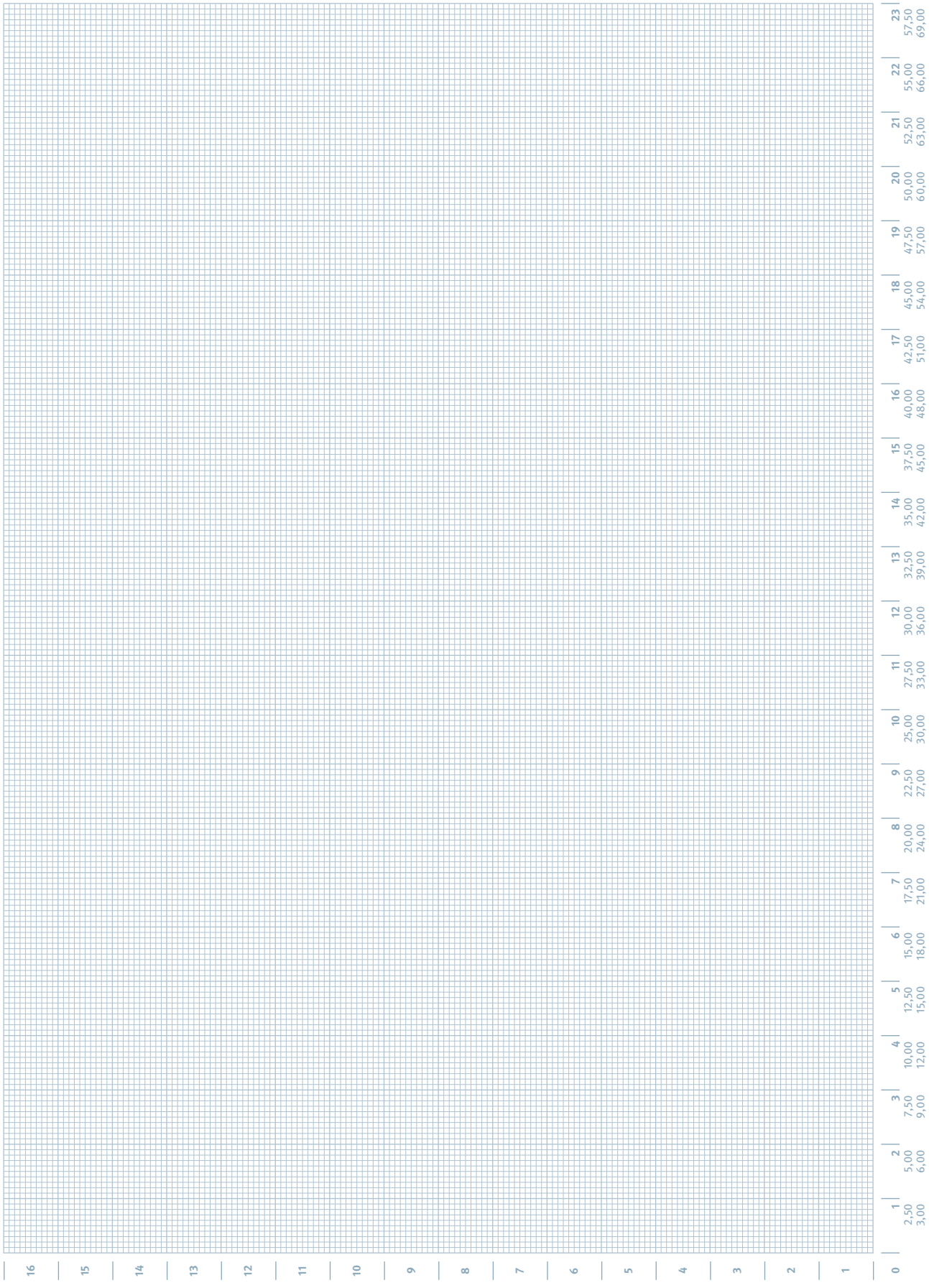
16 15 14 13 12 11 10 9 8 7 6 5 4 3 2 1 0
1 2,50 3,00
2 5,00 6,00
3 7,50 9,00
4 10,00 12,00
5 12,50 15,00
6 15,00 18,00
7 17,50 21,00
8 20,00 24,00
9 22,50 27,00
10 25,00 30,00
11 27,50 33,00
12 30,00 36,00
13 32,50 39,00
14 35,00 42,00
15 37,50 45,00
16 40,00 48,00
17 42,50 51,00
18 45,00 54,00
19 47,50 57,00
20 50,00 60,00
21 52,50 63,00
22 55,00 66,00
23 57,50 69,00

www.alfix-systems.com

ALFIX GmbH
Langhennersdorfer Straße 15
D-09603 Großschirma

Phone +49 (0) 37328 / 800-100
Fax +49 (0) 37328 / 800-199
eMail: info@alfix-systems.com

SALE OF:
- Working and safety scaffolds
- Mobile scaffold towers
- Temporary roofs
- Chimney scaffolds
- Accessories

LEASING OF:
- Working and safety scaffolds
- Mobile scaffold towers
- Temporary roofs

Edition: May 2019