ALFIX
SECURELY SCAFFOLDED

ALFIX TEMPORARY ROOF VARIO

Catalogue and Price List

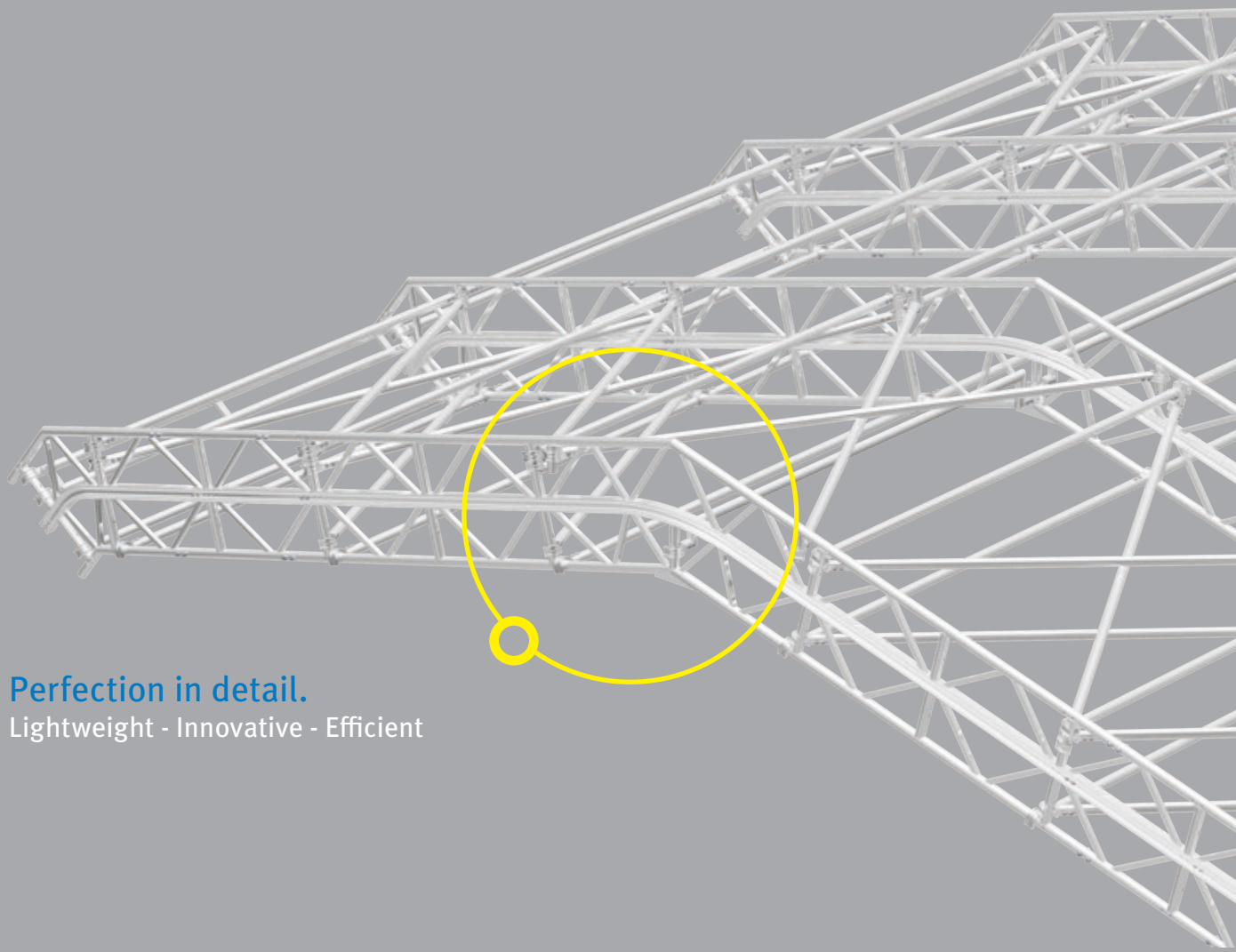

Perfection in detail.

Lightweight - Innovative - Efficient

TABLE OF CONTENTS

All prices are net, plus statutory VAT. With the publishing of the current catalogue, any previous version becomes invalid.

Catalogue and Price List
ALFIX Temporary Roof VARIO by ALFIX

Edition: May 2019

For detailed information on assembly and use of the ALFIX Temporary Roof VARIO please refer to the respective Instructions for Assembly and Use at: www.alfix-system.com

The ALFIX Temporary Roof VARIO can be mounted easily on almost any scaffolding with bay lengths of

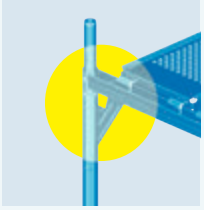

2.57 m

ALFIX system length

On the following pages, system identification represented with:

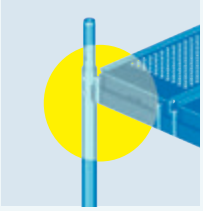

2.50 m

UNIFIX system length

On the following pages, system identification represented with:

INTRODUCTION

ALFIX TEMPORARY ROOF **VARIO**

Customizable solutions: The ALFIX Temporary Roof VARIO is a modular system that can be mounted easily on almost every scaffolding. It is thus the ideal solution for versatile applications. The ALFIX Temporary Roof VARIO optimally fits local and technical conditions. The waterproof design protects against all the elements, whether a building is to be refurbished, converted or a storey is to be added. The ALFIX Temporary Roof VARIO is ideal when it comes to working in structural, civil or road engineering applications – independently of weather conditions.

Suitable for short service times: The light and easy-to-handle components of aluminium along with the mostly screwless connection technique provide for easy, time-saving assembly and efficient transport. The use of the ALFIX Temporary Roof VARIO is always economical due to its long service life.

Rapid assembly: The ALFIX Temporary Roof VARIO can be mounted on almost any scaffolding either as mono-pitch or double-pitch roof. Its design permits manual and almost tool-free preassembly. Up to three completely preassembled roof cassettes can be simultaneously moved by crane. The roof elements are available in standard system lengths of 2.50 m and 2.57 m.

No special parts required, even for roof tarpaulins: Because of the double-track Keder profile, all spans can be provided with standard length tarpaulins. They can be inserted on top of one another thus ensuring perfect weather protection. Roof structures with spans from 4.6 m to 27.72 m can easily be built in 1.5 m increments. The highly wear-resistant keder tarpaulins are flame-retardant (B1), translucent, UV-resistant and the colour coding clearly indicates the dimensions.

THE ADVANTAGES AT A GLANCE

- LIGHTWEIGHT AND ROBUST
- DOUBLE-TRACK KEDER PROFILE
- FLEXIBLE AND VERSATILE IN USE
- AVAILABLE FOR SALE OR RENT

PRODUCT APPLICATION*

DOUBLE-PITCH ROOF 15° ON SUPPORT SCAFFOLDING

The ideal solution for temporary roofing of buildings.

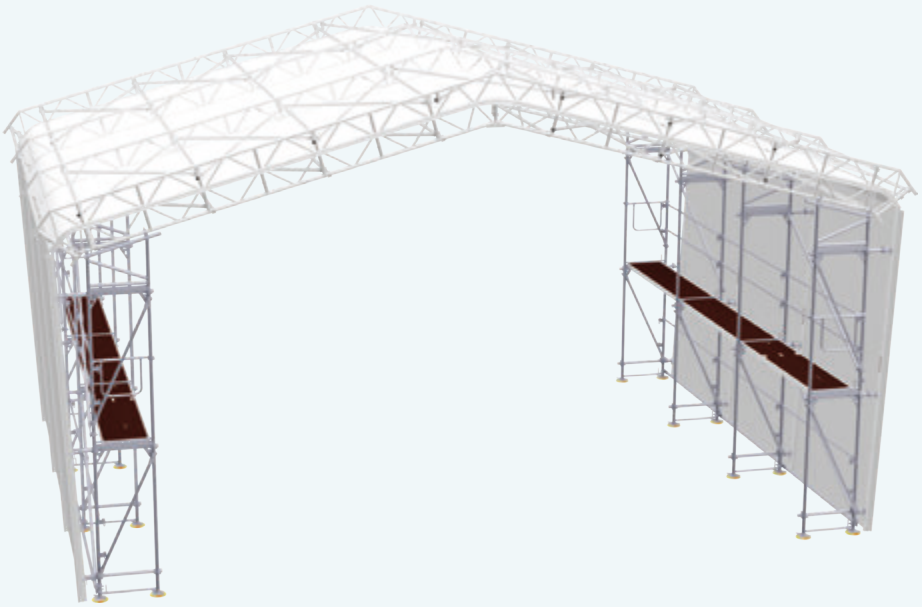

FEATURES:

- roof pitch: 15°
- for spans up to 27.72 m
- for scaffolds in width classes W06 and W09
- highly durable, translucent Keder tarpaulin
- can be mounted on façade and modular scaffolding
- system-independent application

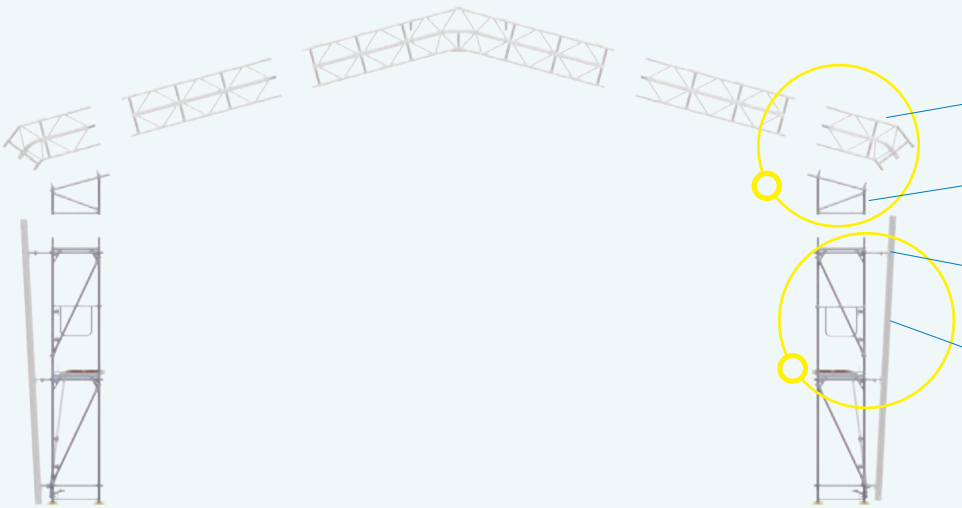

1. Roof girder corner section 37.5° (see p. 13)
2. Girder support 400 (see p. 17)
3. Keder rail holder, 360° rotatable (see p. 23)
4. Keder rail wall profile (see p. 23)

* The ALFIX Temporary Roof VARIO allows for different structures and numerous applications.
Please do not hesitate to contact us to help you create a customized solution tailored to your needs.

DOUBLE-PITCH ROOF 37.5° ON SUPPORT SCAFFOLDING

The ideal solution for temporary roofing of steeply pitched roofs.

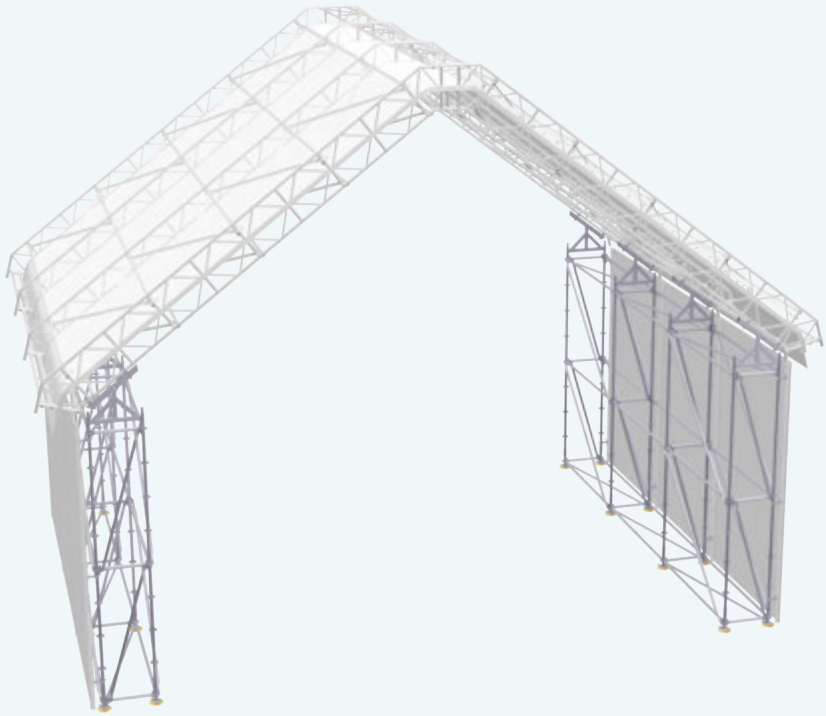

FEATURES:

- roof pitch: 37.5°
- for spans up to 18.0 m
- a steep roof pitch contour can be followed (reduced projected scaffolding)
- for scaffolds in width classes W06 and W09
- highly durable, translucent Keder tarpaulin
- can be mounted on façade and modular scaffolding
- system-independent application

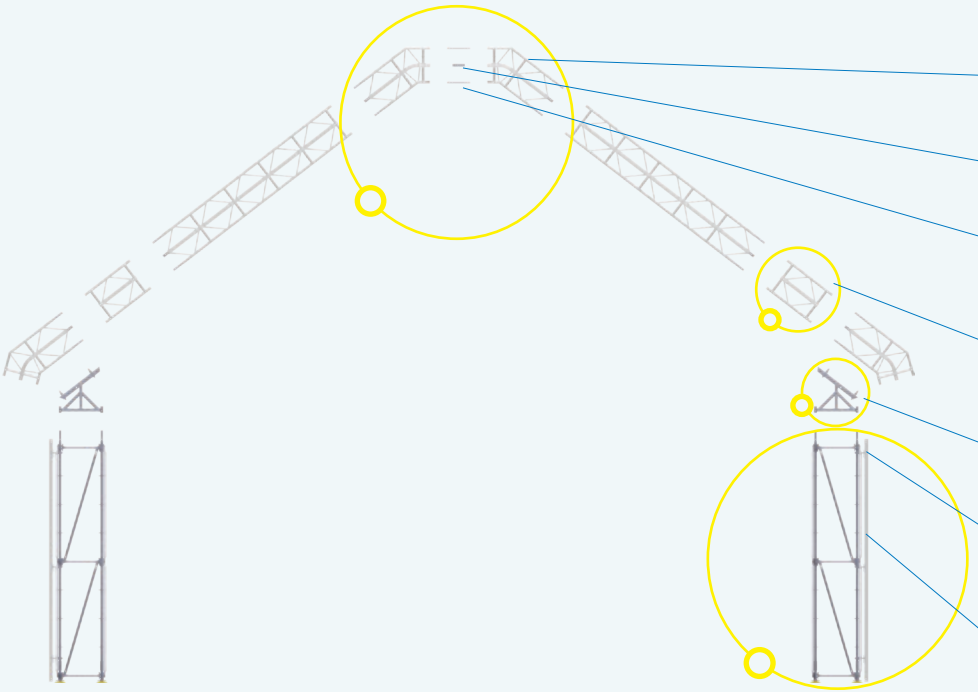

1. Roof girder corner section 37.5° (see p. 13)
2. Keder profile connector (see p. 21)
3. Tube connector for lattice girder (see p. 13)
4. Roof girder adapter (see p. 13)
5. Girder support, pin-jointed (see p. 17)
6. Keder rail holder (see p. 23)
7. Keder rail (see p. 23)

PRODUCT APPLICATION*

MONO-PITCH ROOF ON SUPPORT SCAFFOLDING

The ideal solution for temporary roofing of low pitched roofs.

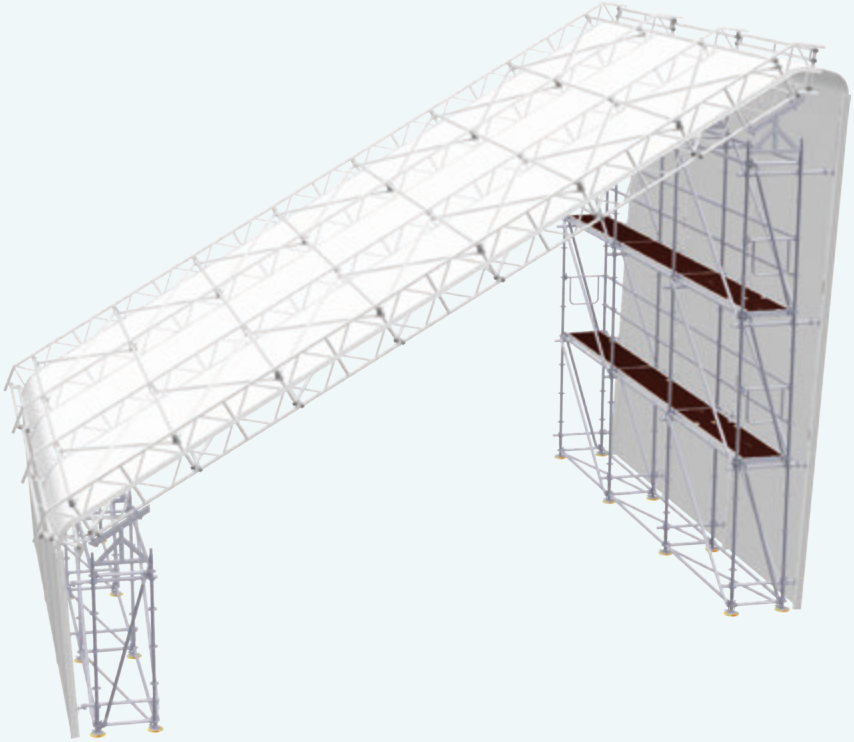

FEATURES:

- roof pitch: adjustable to any roof pitch from 15° to 40°, gridless
- depending on the roof pitch it is possible to create roof structures with spans of up to 14 m
- for scaffolds in width classes W06 and W09
- highly durable, translucent Keder tarpaulin
- can be mounted on façade and modular scaffolding
- system-independent application

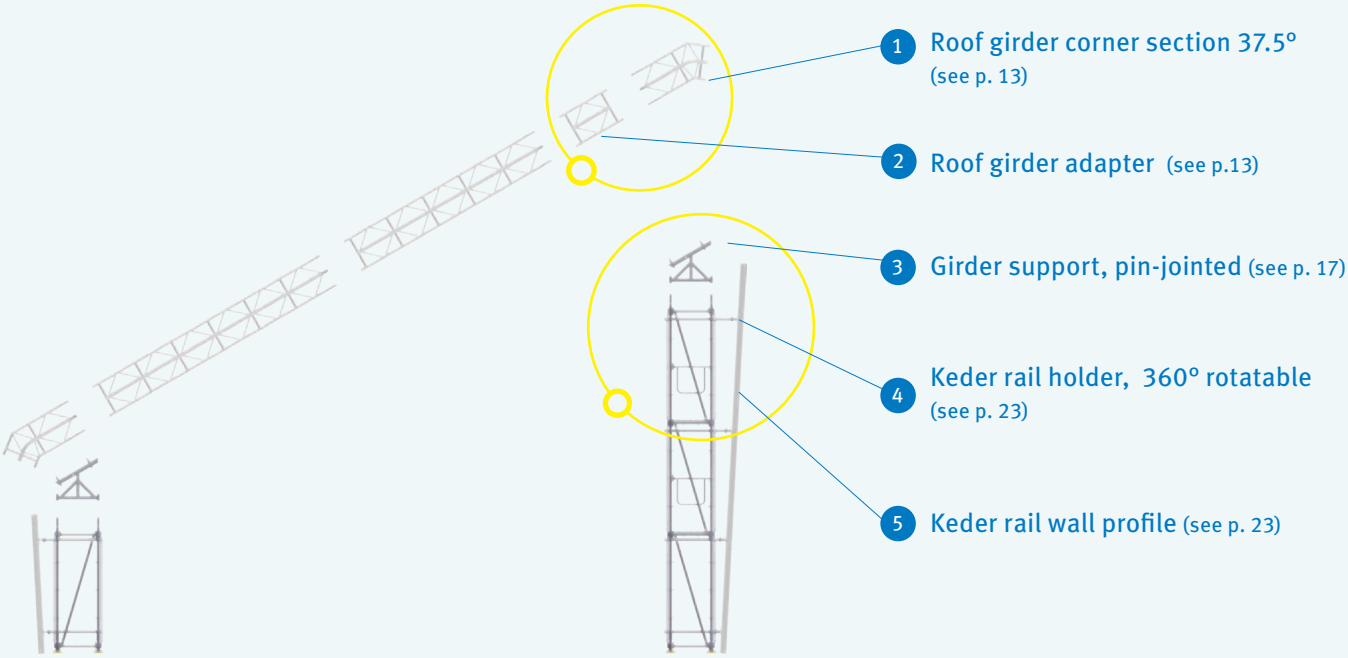

* The ALFIX Temporary Roof VARIO allows for different structures and numerous applications.
Please do not hesitate to contact us to help you create a customized solution tailored to your needs.

DOUBLE-PITCH ROOF 15° KEDER HALL

The ideal solution for temporary roofing in the event sector.

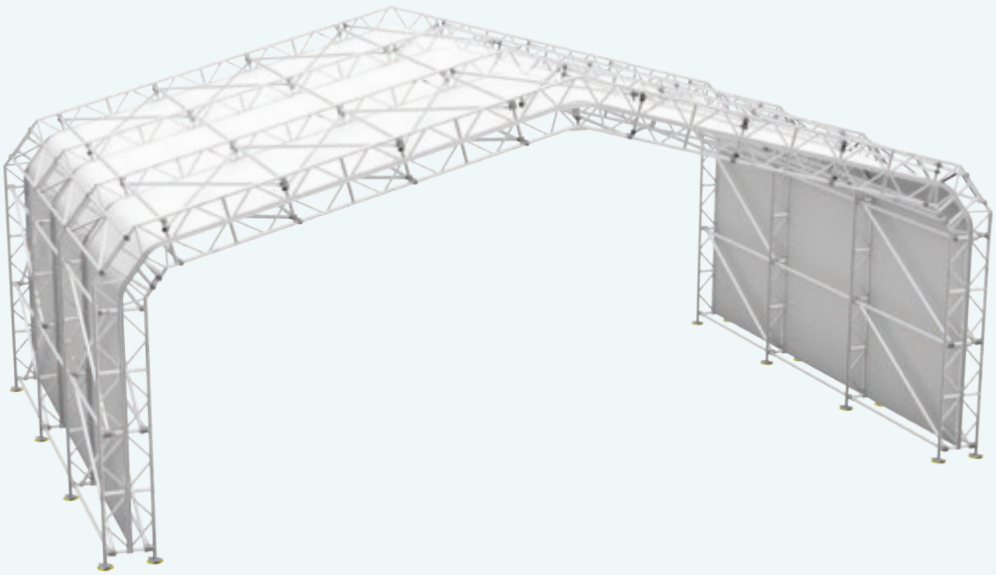

FEATURES:

- roof pitch: 15°
- for spans up to 19.0 m
- does not require any specific substructure
- only consists of ALFIX Temporary Roof VARIO components
- eaves height up to approx. 6 m
- highly durable, translucent Keder tarpaulin
- system-independent application

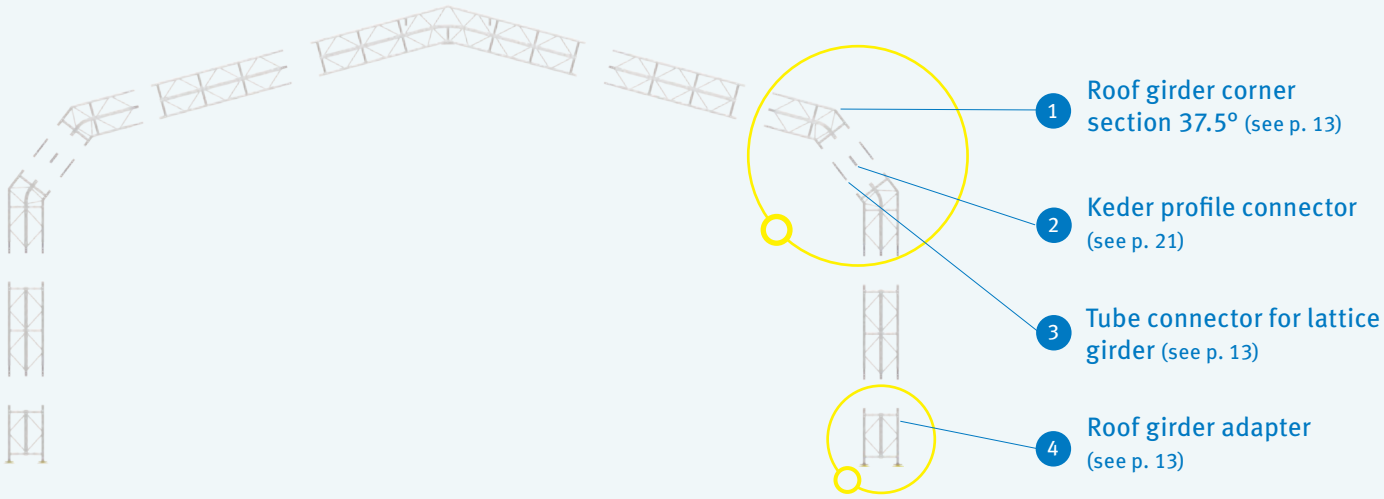

PRODUCT APPLICATION*

DOUBLE-PITCH ROOF 15° KEDER HALL, MOBILE

The ideal solution to match the construction progress by moving section by section.

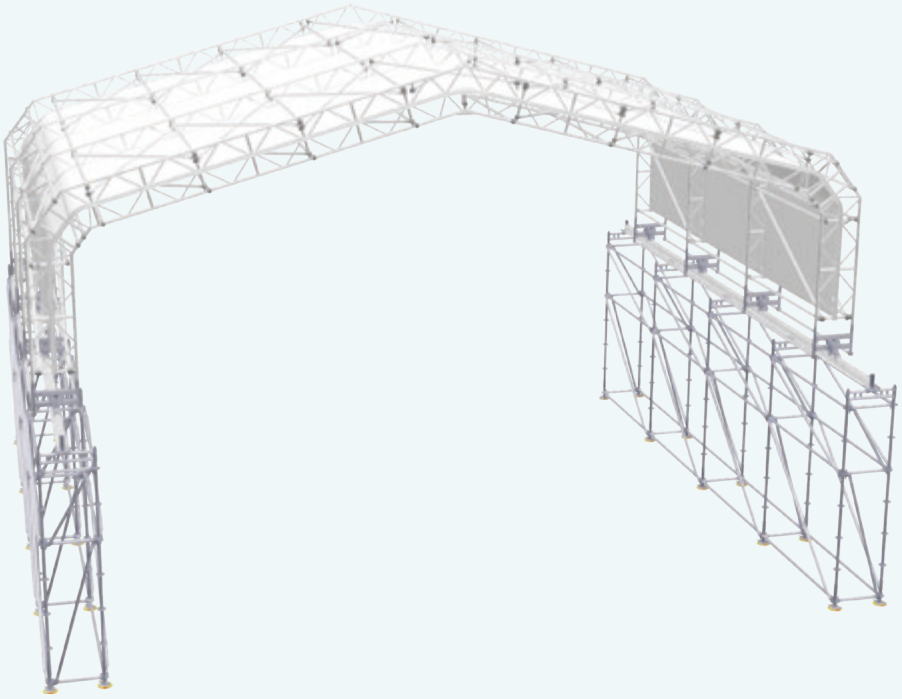

FEATURES:

- roof pitch: 15°
- for spans up to 19.0 m
- easy to move by hand
- highly economical due to optimized use of material
- rails do not need to be laid exactly parallel, since the rolling frame permits equalization in the transverse direction
- highly durable, translucent Keder tarpaulin
- can be mounted on façade and modular scaffolding
- system-independent application

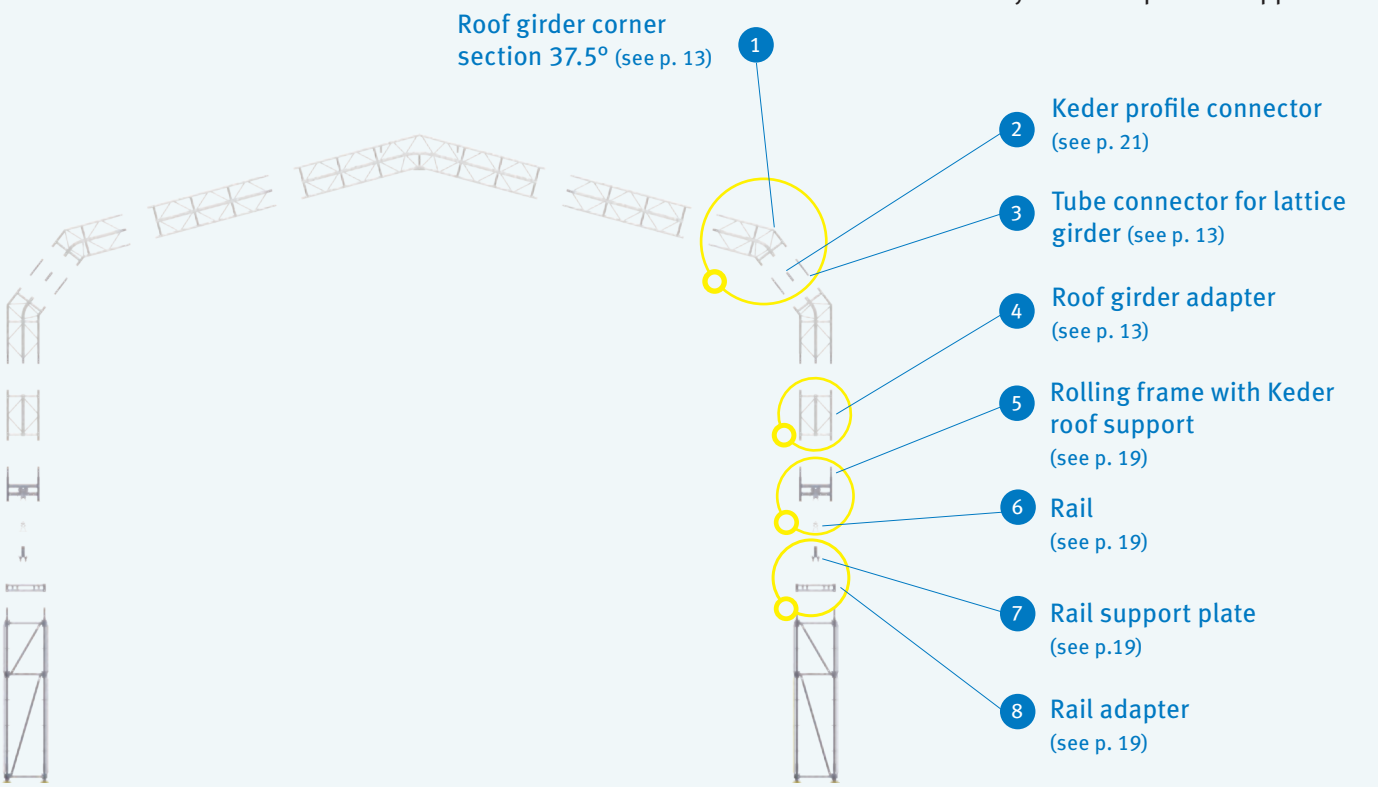

* The ALFIX Temporary Roof VARIO allows for different structures and numerous applications.
Please do not hesitate to contact us to help you create a customized solution tailored to your needs.

DOUBLE-PITCH ROOF 15° ON SUPPORT SCAFFOLDING, MOBILE

The ideal mobile and temporary roofing solution for working and support scaffolds.

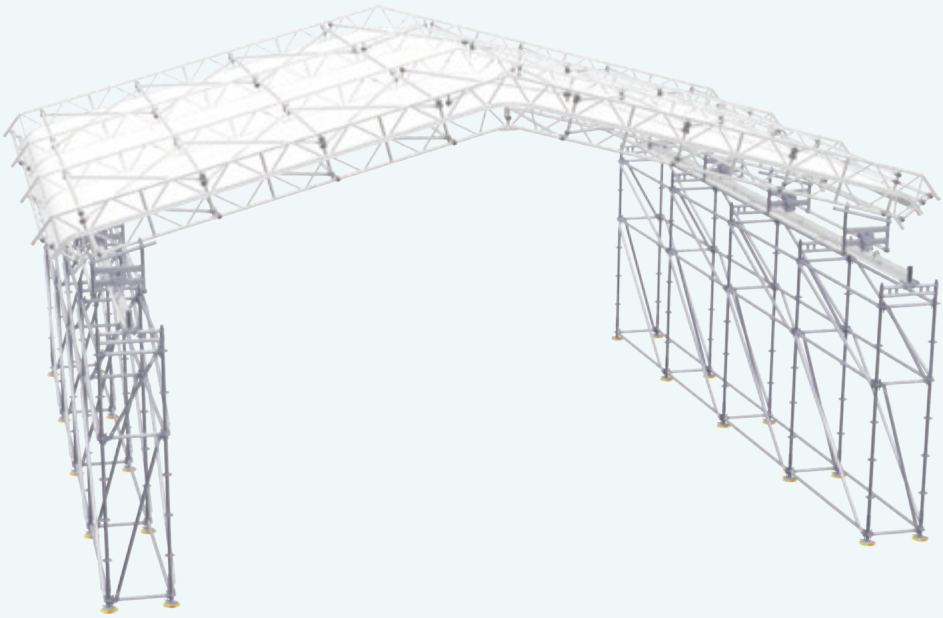

FEATURES:

- roof pitch: 15°
- for spans up to 19.0 m
- easy to move by hand
- practical design for sectional roofing
- highly economical due to optimized use of material
- flexible solution by moving the roof
- easy to open for material supply
- highly durable Keder tarpaulin
- can be mounted on façade and modular scaffolding

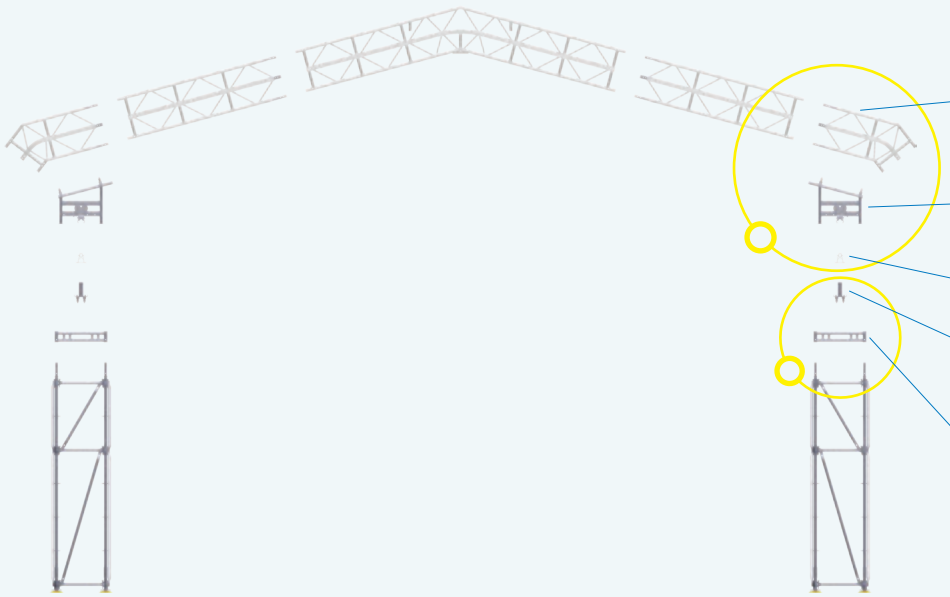

1. Roof girder corner section 37.5° (see p. 13)
2. Rolling frame with 15° roof support (see p. 19)
3. Rail (see p. 19)
4. Rail support plate (see p.19)
5. Rail adapter (see p. 19)

PRODUCT APPLICATION*

DOUBLE-PITCH ROOF 15°, MOBILE, WITH TRIANGULAR SUPPORT

The ideal mobile and temporary roofing solution during insulation work in road and civil engineering.

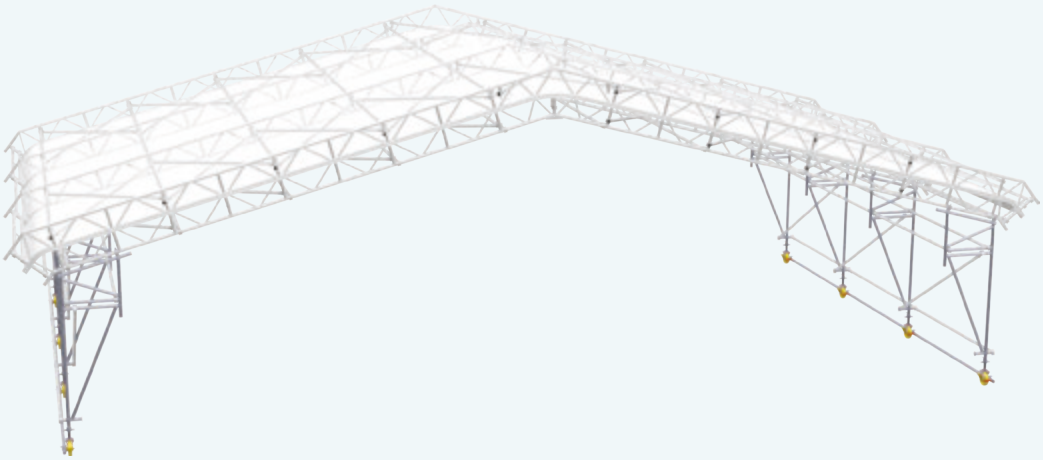

FEATURES:

- roof pitch: 15°
- span: max. 16.13 m
- triangular support and track-guided castor required
- easy to move by hand
- highly durable, translucent Keder tarpaulin
- system-independent application

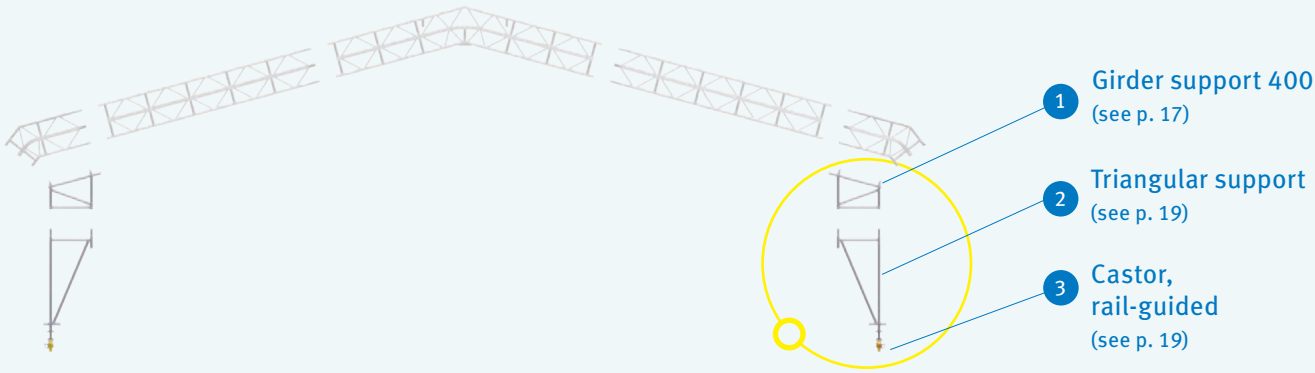

* The ALFIX Temporary Roof VARIO allows for different structures and numerous applications.
Please do not hesitate to contact us to help you create a customized solution tailored to your needs.

APPLICATION OF THE ROOF GIRDER CORNER SECTION 37.5°

The roof girder corner section 37.5° - a true all-rounder: with the help of this component there are various possibilities in creating roof structures with variable inclinations. Due to its many applications, the roof girder corner section 37.5° is unique on the market.

The roof girder corner section 37.5° consists of high-quality aluminium profiles. Aluminium tubes form the top and bottom chord. But the centerpiece is the precise and curved double-track Keder profile, made of aluminium.

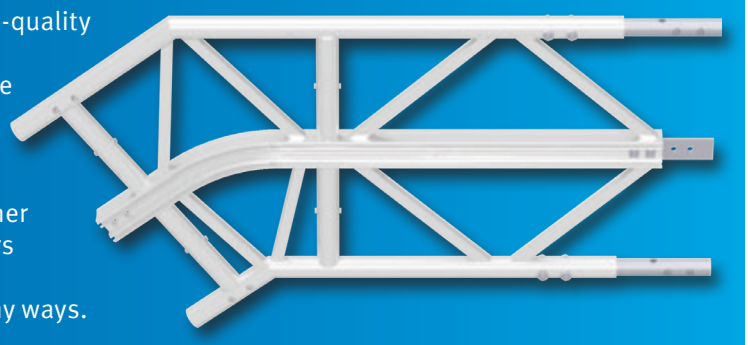

Depending on the intended use, the roof girder corner section 37.5° can be attached to roof or ridge girders using tube connectors or Keder profile connectors. Due to its symmetrical design it can be used in many ways.

Please refer to page 13 for detailed information on the roof girder corner section 37.5°.

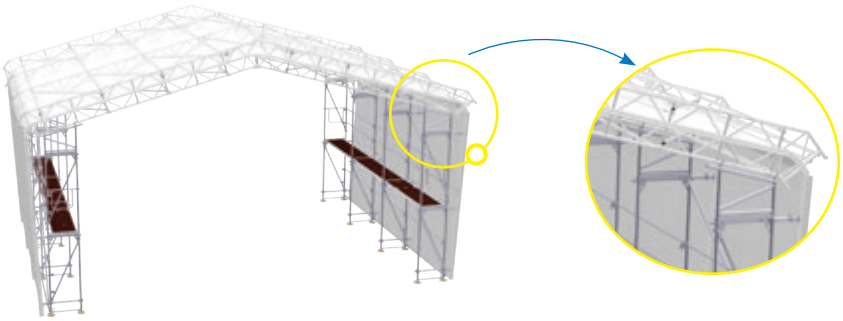

Double-pitch roof 15° on support scaffolding

The double-pitch roof 15° on support scaffolding in combination with the roof girder corner section 37.5°, creates a completely sealed scaffold (weather protection) in the eave.

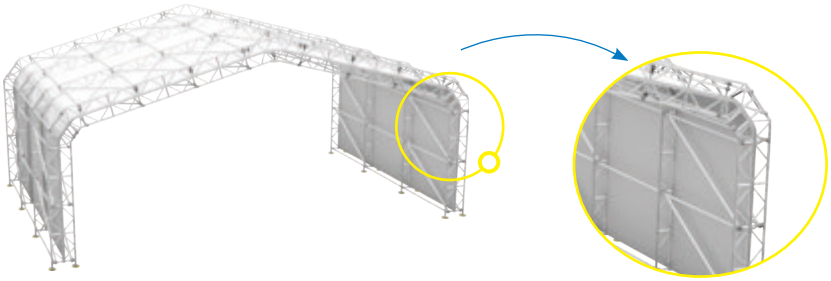

Double-pitch roof 15° Keder hall

Weather protection halls in tent design can be built using **two roof girder corner sections 37.5°** connected to a ridge girder 15°. In this design variant, the vertical support elements consist of roof girders.

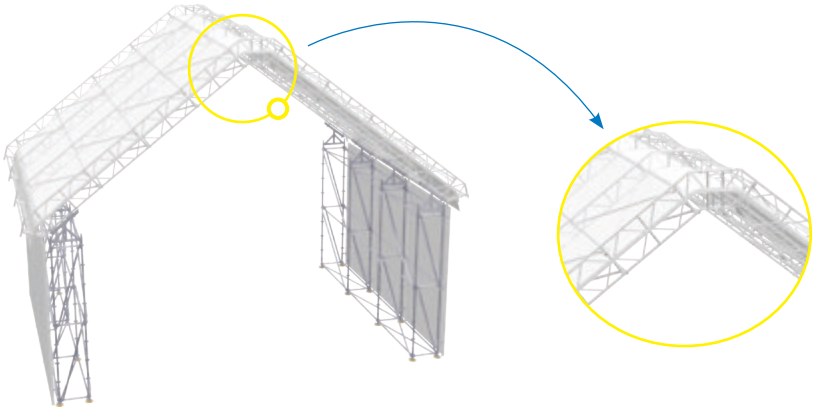

Double-pitch roof 37.5° on support scaffolding

For greater roof pitches, **two roof girder corner sections 37.5°** are fitted together to form the ridge girder. Afterwards further roof girders must be mounted to create the required span.

Please check our website for further details: www.temporary-roof.com

MAIN COMPONENTS

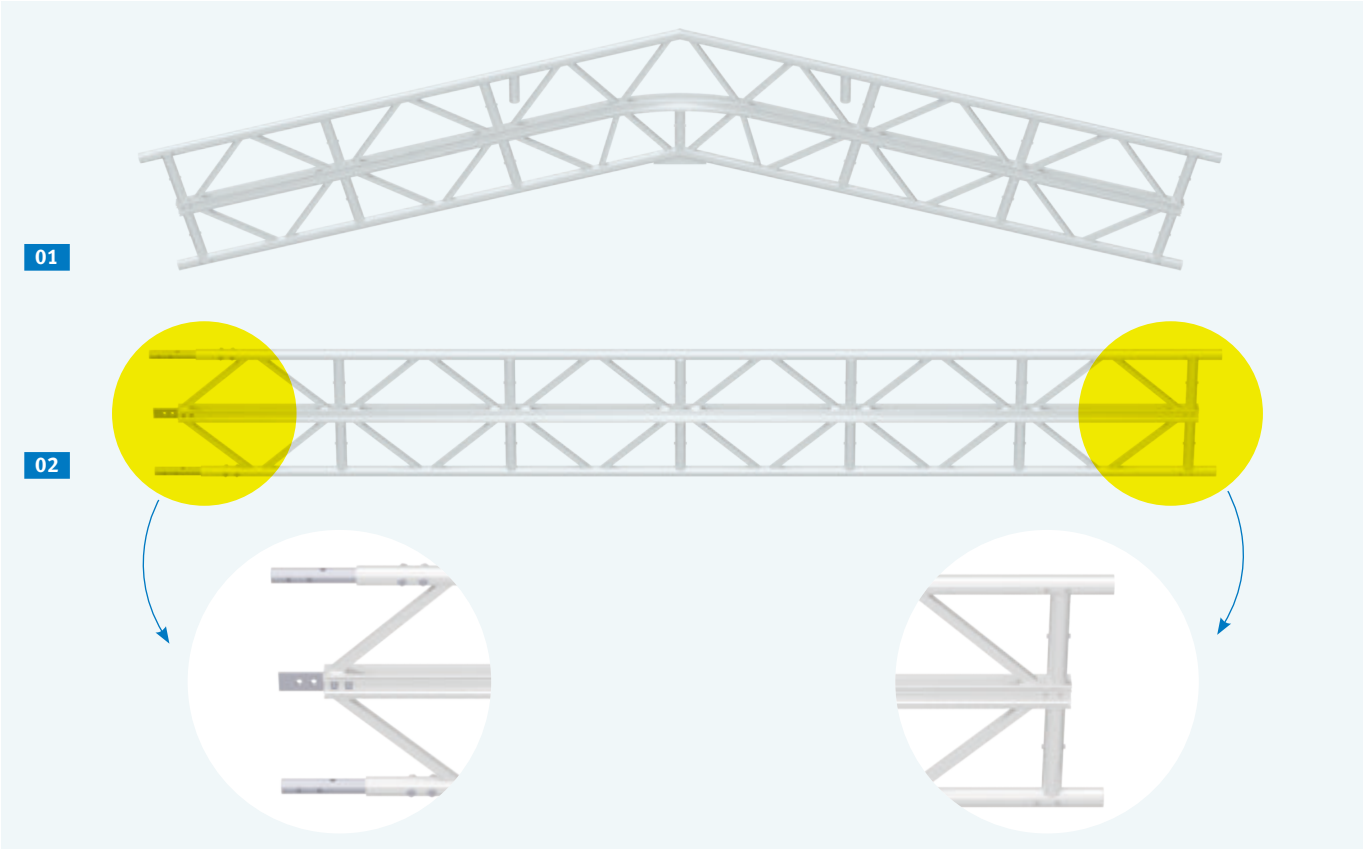

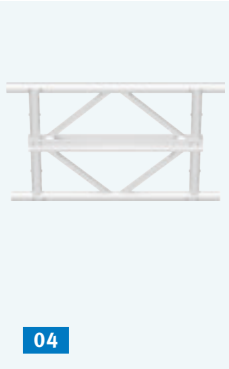

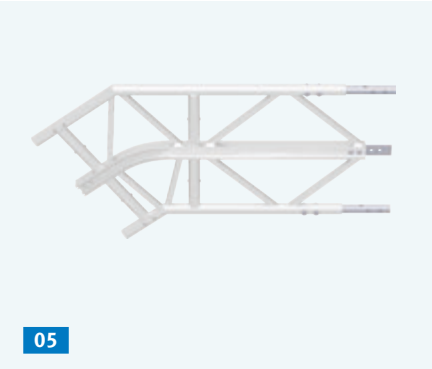

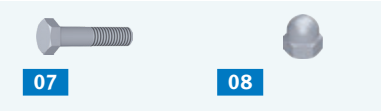

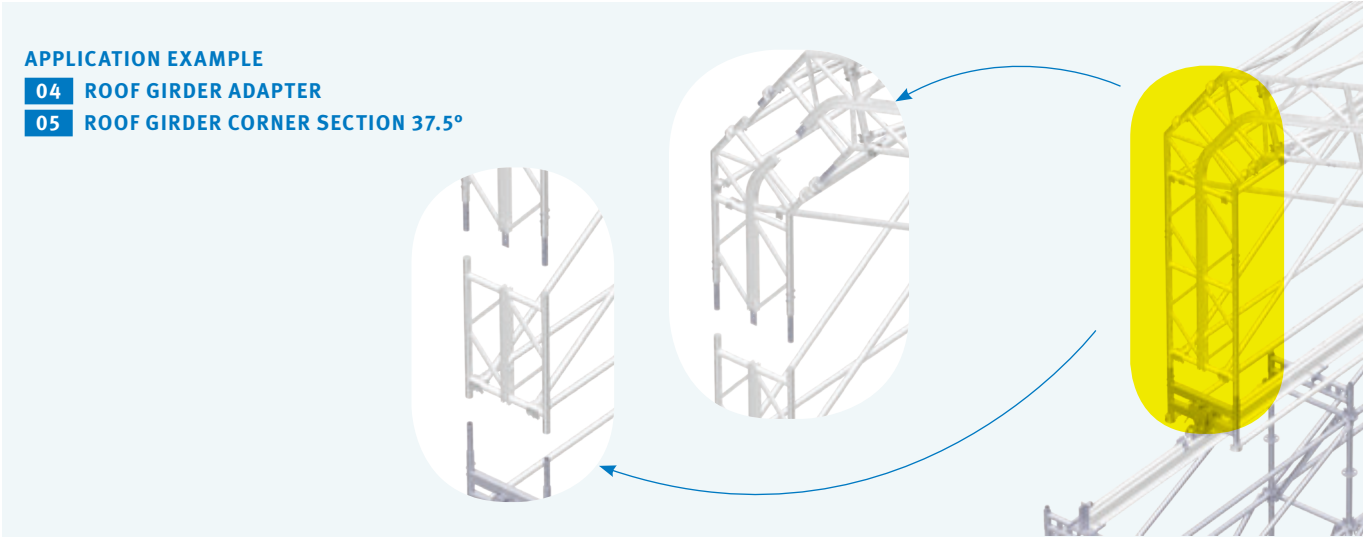

FIG.	DESIGNATION	DIMENSIONS L/H×W [m]	WEIGHT approx. [kg]	BAY LENGTH [m]*		ARTICLE NO.	PRICE [€]
01	**Ridge girder** aluminium ø 48.3 mm — overall height 60 cm, roof pitch 15° — centered, double Keder profile — top chord shaped as Keder rail to accommodate the tarpaulins	4.60	44.1			47 00 460	**629.10**
02	**Roof girder** aluminium ø 48.3 mm — incl. connector, screws M12, safety bolt 14 x 70 mm and spring clip — overall height 60 cm — centered, double Keder profile — allows accommodating 2 tarpaulins one above the other, thereby creating an insulation layer	0.75	11.0			47 10 075	**154.90**
		1.50	17.3			47 10 150	**204.25**
		2.25	24.0			47 10 225	**299.95**
		3.00	30.8			47 10 300	**377.65**
		3.75	37.5			47 10 375	**457.60**
		4.50	44.2			47 10 450	**542.90**
03	**Roof girder end piece** aluminium ø 48.3 mm — end piece for roof girder, required when mono-pitch roofs must be assembled	0.32	3.1			47 10 032	**51.95**
04	**Roof girder adapter** ⊕ aluminium ø 48.3 mm — adapter for use with 05 roof girder corner section 37.5° or rolling frame with Keder roof support (see p. 18/19) — required for proper bracing of the wall sections in constructions with closed roof structures	1.00	8.4			47 12 100	**142.50**
05	**Roof girder corner section 37.5°** ⊕ aluminium ø 48.3 mm — for double-pitch roofs, with a roof pitch of 37.5° and Keder halls with a roof pitch of 15°, must be assembled in pairs — for assembly in double-pitch roofs 37.5° and Keder halls 15° two additional tube connectors 06 for assembly in double-pitch roofs 37.5° and Keder halls 15° two additional tube connectors 06 are required	1.15	16.3			47 11 115	**247.50**
06	**Tube connector for lattice girder** steel, hot-dip galvanised, incl. 4 bolts M14 x 65		1.5			13 88 030	**21.30**
07	**Hexagon bolt** zinc-plated, M14 x 65					14 53 000	**1.00**
08	**Hexagon dimed cap nut** zinc-plated, M14					73 02 003	**1.25**
09	**Safety bolt for lattice girder** steel, zinc-plated, M14 x 70 — incl. spring clip					13 88 114	**2.80**

***BAY LENGTHS** Alfix 2.57 m Unifix 2.50 m

The "centerpiece" of the roof structure is formed by the three-chord lattice girder. The focus is on the **double Keder profile**, by means of which several tarpaulins can be accommodated. Thus, Keder tarpaulins in standard lengths can be installed to create roof structures with different spans.

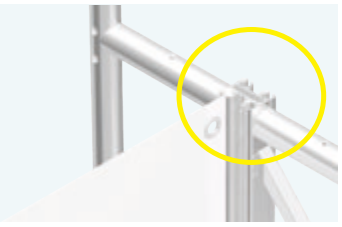

MAIN COMPONENTS

01

02

03

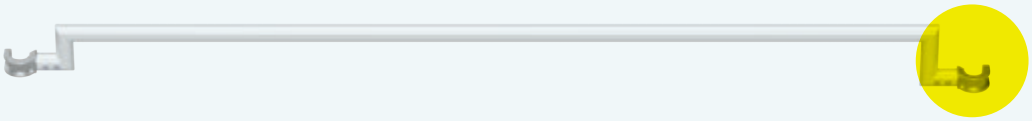

04

05

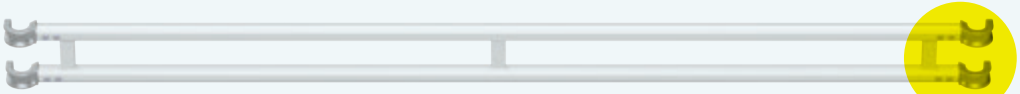

06

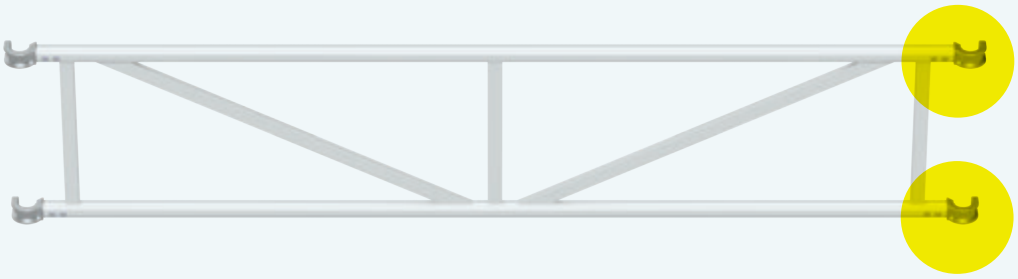

Screwless connection technique.
Self-locking claws on longitudinal, diagonal and ridge ledgers, as well as on eave bracing, provide stability and allow for rapid, easy assembly.

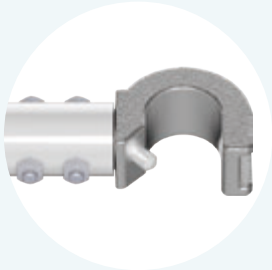

FIG.	DESIGNATION	DIMENSIONS L/H×W [m]	WEIGHT approx. [kg]	BAY LENGTH [m] *	ARTICLE NO.	PRICE [€]
01	**Longitudinal ledger** aluminium Ø 48.3 mm — bracing element for roof girders in top and bottom chords — self-locking claws for efficient assembly — screwless connection to the roof girder	2.57	4.7		47 26 257	**65.70**
		2.50	4.6		47 25 250	**65.70**
02	**Diagonal ledger** aluminium Ø 48.3 mm — helps stabilize the construction, acts as bracing element for roof girders — to be installed in every starting and end bay, as well as in every 5th bay — screwless connection to the roof girder — self-locking claws for efficient assembly	2.57 × 0.75	5.0		47 30 007	**59.10**
		2.50 × 0.75	4.9		47 30 008	**59.10**
		2.57 × 1.50	5.4		47 30 001	**70.75**
		2.50 × 1.50	5.3		47 30 002	**70.75**
03	**Ridge ledger** aluminium Ø 48.3 mm — bended, self-locking claws — for stabilising the ridge section — to be installed in every roof bay in the bottom chord section, attached to the vertical tube of the ridge	2.57	5.1		47 40 257	**88.35**
		2.50	5.0		47 40 250	**88.35**
04	**Ridge ledger 37.5°** ⊕ aluminium Ø 48.3 mm — constructed as item 03, but equipped with double-claw on one side — only for use in double-pitch roof 37.5°	2.57	7.4		47 41 257	**91.00**
		2.50	7.3		47 41 250	**91.00**
05	**Stiffener - Eave bracing** aluminium Ø 48.3 mm — self-locking claws — for horizontal stability — to be installed in every starting and end bay, as well as in every stiffening bay (on both sides)	2.57	9.5		47 50 257	**149.85**
		2.50	9.3		47 51 250	**149.85**
06	**Stiffener - Corner bracing** aluminium Ø 48.3 mm — self-locking claws — for horizontal stability when bracing corner sections — to be installed in every starting and end bay, as well as in every stiffening bay (on both sides)	2.57	11.9		47 52 257	**154.60**
		2.50	11.7		47 53 250	**154.60**

*** BAY LENGTHS** Alfix 2.57 m Unifix 2.50 m

APPLICATION EXAMPLE
04 RIDGE LEDGER 37,5°

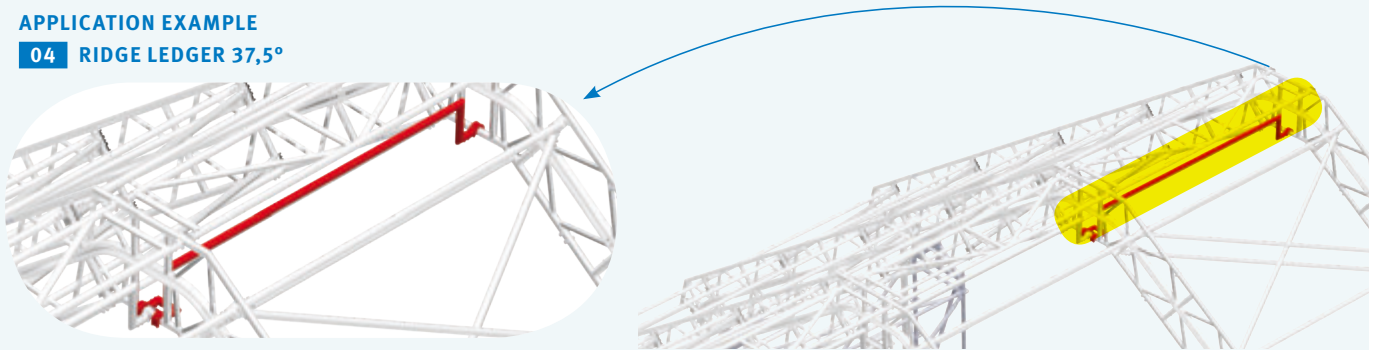

MAIN COMPONENTS

01

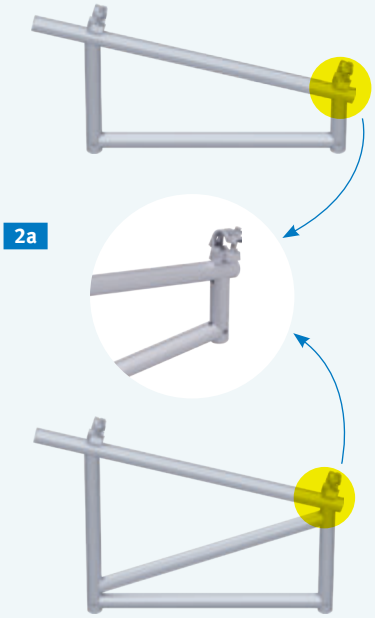

2a

2b

03

APPLICATION EXAMPLE
03 GIRDER SUPPORT, PIN-JOINTED

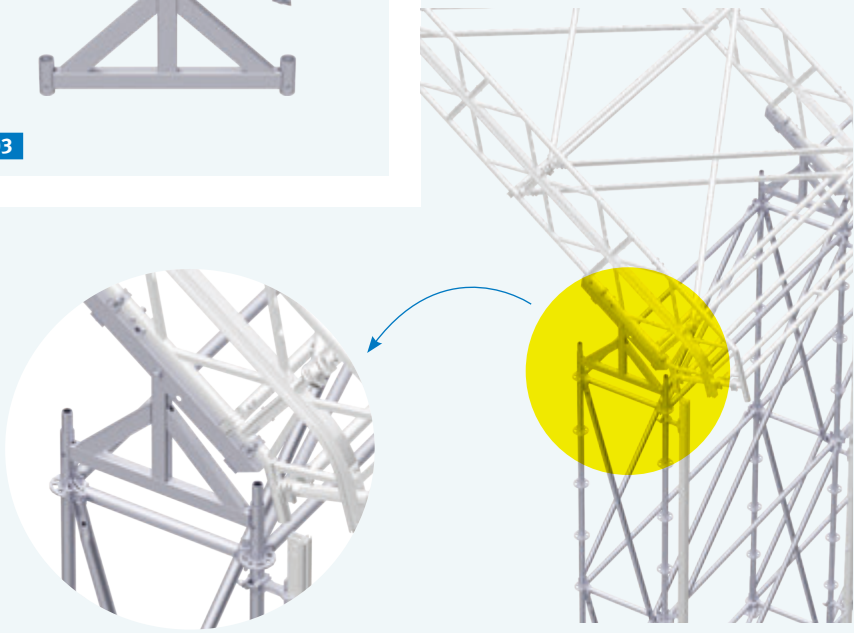

APPLICATION EXAMPLE 04 KEDER TARPAULIN PVC

Colour coding: marking of the tarpaulin length (in metres) with a coloured tension belt. The additional colour dot indicates the bay length.

bay length: 2.57 m

6.00 8.00 10.00 12.00

bay length: 2.50 m

6.00 8.00 10.00 12.00

FIG.	DESIGNATION		DIMENSIONS L/H×W [m]	WEIGHT approx. [kg]	BAY LENGTH [m]*		ARTICLE NO.	PRICE [€]
01	**Head strut** aluminium, Ø 48.3 mm — triple-chord beam 0.45 x 0.45 x 0.45 m — installation for spans of 20.48 m or larger to minimize the unsupported length of the roof support		6.20	43.0			47 20 620	**602.30**
			8.20	56.7			47 20 820	**762.15**
02	**Girder support** steel Ø 48.3 mm, hot-dip galvanised — overall height: 200 or 400 mm — plus 2 swivel couplers (see p. 20/21) — with 2 welded-on halfcouplers — establishes a positive and non-positive connection between roof girder and support scaffolding	2a 200	0.73	9.8			47 60 200	**105.55**
			0.74	9.8			47 61 200	**105.55**
		2b 400	0.73	14.0			47 60 400	**109.20**
			0.74	14.0			47 61 400	**109.20**
			1.09	18.8			47 60 401	**119.70**
			1.10	18.8			47 61 401	**119.70**
03	**Girder support, pin-jointed** ⊕ steel, hot-dip galvanised — with two detachable combination couplers and hole spacing for attachment of additional combination couplers, various fastening possibilities to the roof girder		0.73	21.4			47 60 500	**170.25**
			0.74	21.4			47 61 500	**170.25**
			1.09	26.4			47 60 501	**182.15**
			1.10	26.4			47 61 501	**182.15**
04	**Keder tarpaulin PVC** ⊕ white, 590 g/m², DIN 4102 B1 (without fig.) — flame-retardant — metal eyelets at the ends on both sides at intervals of 50 cm — strap with steel eyelet — colour coding to indicate tarpaulin length and bay width (see page 16 for application example) gable tarpaulins available upon request		8.00 × 2.46	12.0			47 90 080	**264.15**
			10.00 × 2.46	15.0			47 90 100	**330.20**
			12.00 × 2.46	17.0			47 90 120	**396.20**
			8.00 × 2.53	12.0			47 91 080	**264.15**
			10.00 × 2.53	15.0			47 91 100	**330.20**
			12.00 × 2.53	17.0			47 91 120	**396.20**

*** BAY LENGTHS** Alfix 2.57 m Unifix 2.50 m

The aforementioned prices for Keder tarpaulins shall exclusively apply to the specified standard dimensions.
Other sizes and colours available upon request. Stated prices are special net prices.

MAIN COMPONENTS

01

02

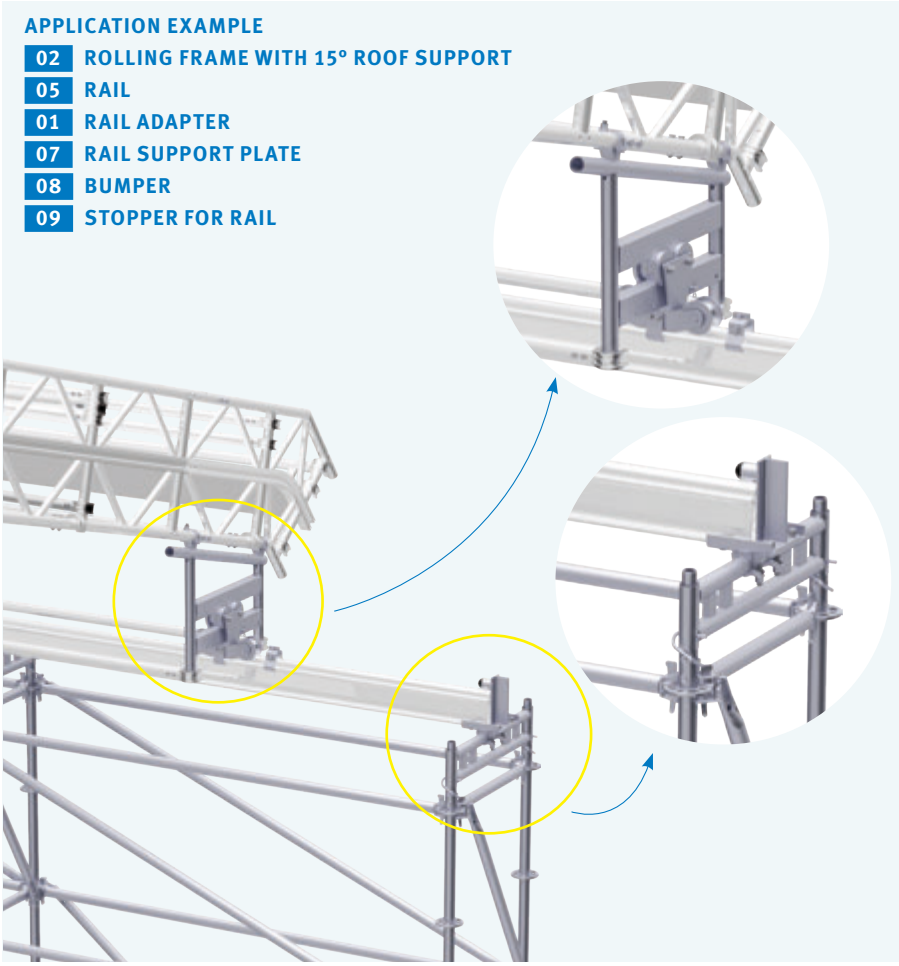

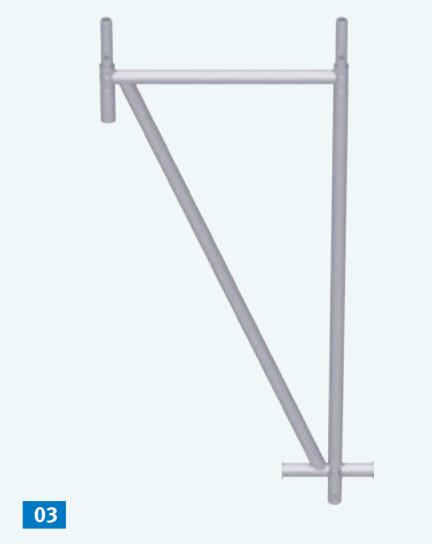

03

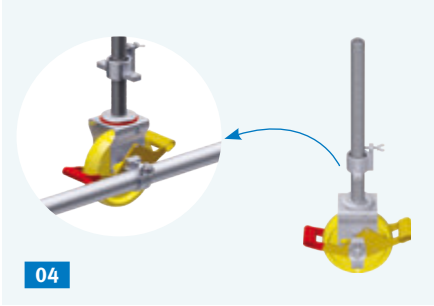

04

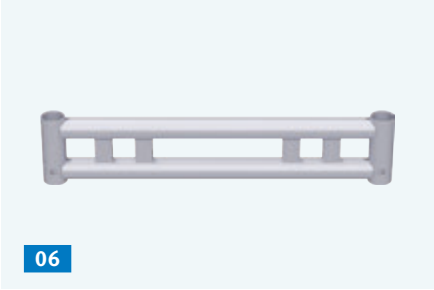

06

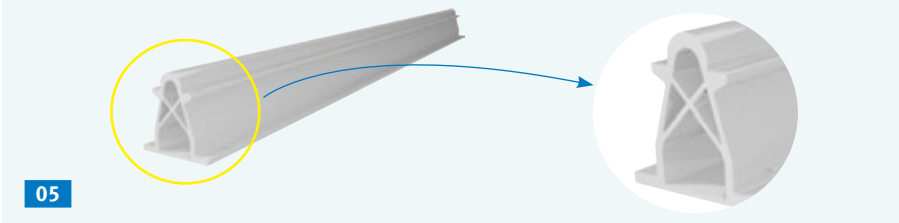

05

07

08

09

FIG.	DESIGNATION	DIMENSIONS L/H×W [m]	WEIGHT approx. [kg]	BAY LENGTH [m] *		ARTICLE NO.	PRICE [€]
01	**Rolling frame with Keder roof support** ⊕ steel, hot-dip galvanised — to create mobile Keder hall constructions — with permanent lift-off preventer — rails do not need to be laid exactly parallel, since the rolling frame permits equalization in transverse direction	0.60	32.7			47 62 060	**522.25**
02	**Rolling frame with 15° roof support** steel, hot-dip galvanised — to create mobile double-pitch roof constructions — with permanent lift-off preventer — rails do not need to be laid exactly parallel, since the rolling frame permits equalization in transverse direction	0.60	33.2			47 62 061	**530.15**
03	**Triangular support** steel Ø 48.3 mm, hot-dip galvanised — to create mobile scaffolding units — bracing by means of longitudinal and diagonal ledgers (see p. 14/15)	1.80 × 0.73	18.9			47 70 180	**105.55**
		1.80 × 0.74	18.9			47 71 180	**105.55**
04	**Castor, rail-guided** steel, zinc-plated, plastic wheel Ø 200 mm — permissible load capacity: 10 kN — with halfcoupler at the castor axis to stabilise the track	0.50	7.7			47 99 001	**149.00**
05	**Rail** aluminium — mobile roof element — high-quality and lightweight aluminium extruded profile — special rail structure for permanent lift-off prevention	2.07	28.5			47 63 207	**234.40**
		2.57	35.4			47 63 257	**287.60**
		3.07	42.2			47 63 307	**340.80**
		2.00	27.5			47 63 200	**226.75**
		2.50	34.4			47 63 250	**279.95**
		3.00	41.3			47 63 300	**333.20**
06	**Rail adapter** steel, hot-dip galvanised — must be attached for use in façade scaffolding — allows for mounting of rail support plate	0.70	6.6			47 62 500	**46.15**
		1.09	10.0			47 62 501	**54.55**
		1.10	9.8			47 62 601	**54.55**
07	**Rail support plate** steel, hot-dip galvanised, incl. standard parts — steel, with two half-couplers — easy installation (façade or modular scaffoldings)	0.15 × 0.18	4.5			47 62 000	**37.20**
08	**Bumper** steel, hot-dip galvanised — stop element for mobile roof constructions — steel, shock-absorbing plastic plug	0.22	3.0			47 62 001	**21.25**
09	**Stopper for rail** steel, hot-dip galvanised — securing device for mobile constructions to avoid accidental shifting		0.8			47 62 002	**23.10**

*** BAY LENGTHS** Alfix 2.57 m Unifix 2.50 m

ACCESSORIES

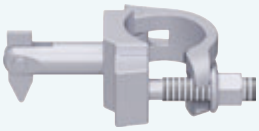
01


02

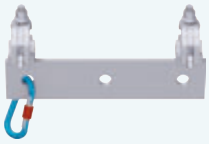
03

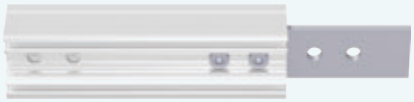
4a


4b


05


06


07


08


09


10


11a


11b


12

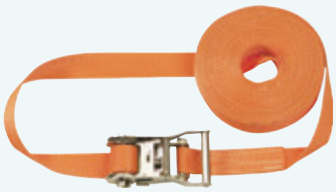
13 Fig. similar


14


15

APPLICATION EXAMPLE 03 TENSION BELT COUPLER

The tension belt coupler enables the defined force transmission with any downstand steel cable structures that may be required within the roof girders. The tension belt coupler is used for attaching a steel cable downstand structure or, in special cases, a tension belt coupler. By means of two couplers a distributed force is applied to the bottom chord. The tension belt coupler can also be used as an attachment point for loads of up to 250 kg, e.g. in the event sector.

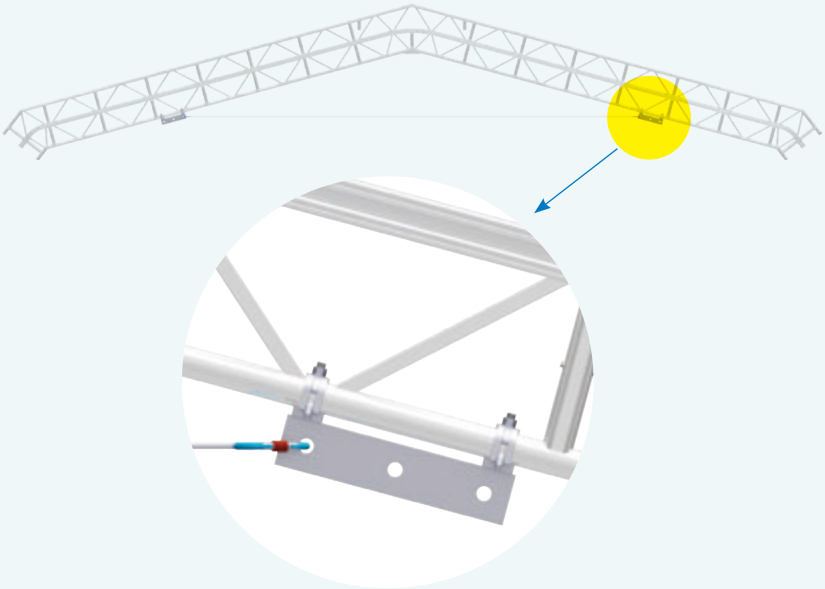

FIG.	DESIGNATION		DIMENSIONS L/H×W [m]	WEIGHT approx. [kg]	BAY LENGTH [m] *	ARTICLE NO.	PRICE [€]
01	**Putlog coupler** steel, zinc-plated, Ø 48.3 mm — for fixing eave ledgers / guardrails (see p. 22/23)	wrench size 19		0.8		13 05 019	**7.00**
		wrench size 22		0.6		13 05 022	**7.00**
02	**Swivel coupler** steel, zinc-plated, Ø 48 / 48 mm	wrench size 19		1.0		13 03 019	**10.80**
		wrench size 22		1.0		13 03 022	**10.80**
03	**Tension belt coupler** ⊕ steel, zinc-plated, with carabiner 360 x 80 x 10 mm, for tubes Ø 48.3 mm	wrench size 19		3.7		43 50 019	**54.80**
		wrench size 22		3.7		43 50 022	**54.80**
04	**Groove profile extension** aluminium, incl. bolts and nuts	4a 250	0.25	1.6		47 99 008	**17.60**
		4b 500	0.50	2.5		47 99 009	**25.80**
05	**Groove profile extension 90** aluminium, incl. bolts and nuts			1.7		47 99 010	**20.70**
06	**Eave ledger connection** steel, hot-dip galvanised, 100 x 50 x 8 mm, with tilting pin			0.4		47 45 300	**15.00**
07	**Keder profile connector** steel, hot-dip galvanised			0.7		47 99 011	**6.15**
08	**Cylinder head screw** steel, zinc-plated, M12 x 30					73 01 025	**0.75**
09	**Hexagon nut** M 12 DIN 934 8.8 steel, zinc-plated, M12					73 01 030	**0.65**
10	**Locking pin** steel, hot-dip galvanised			0.1		14 50 000	**1.10**
11	**Sponge rubber** — for sealing butted Keder profiles	10a Roof girder seal, self-adhesive				47 99 020	**1.10**
		10b Keder rail seal				47 99 005	**1.00**
12	**Disposable tie** packaging unit: 100 pieces, white		0.30 × 0.005			37 40 001	**0.25**
13	**Lashing strap with ratchet** 1-piece, 2000 daN		6.00 × 0.035	1.1		37 68 004	**16.80**
14	**Scaffold rope** plastic, ø 8 mm, with clip on one rope end, 4 shafts		1.50			37 82 004	**0.95**
			2.50			37 82 006	**1.20**
15	**Quick strap fastener** strap breaking load: 750 daN		0.55 × 0.025			37 41 000	**1.30**

Keder tarpaulins (woven fabric and PE mesh) upon request.

*** BAY LENGTHS** Alfix 2.57 m Unifix 2.50 m

APPLICATION EXAMPLE 05 GROOVE PROFILE EXTENSION 90

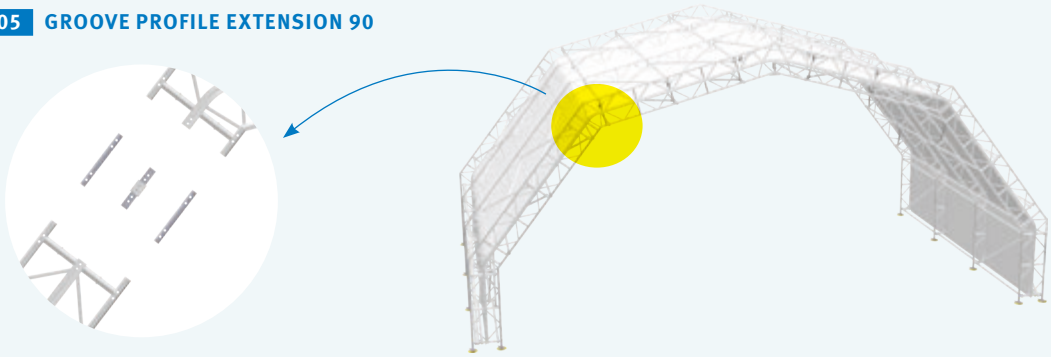

KEDER RAIL SYSTEM


01


02

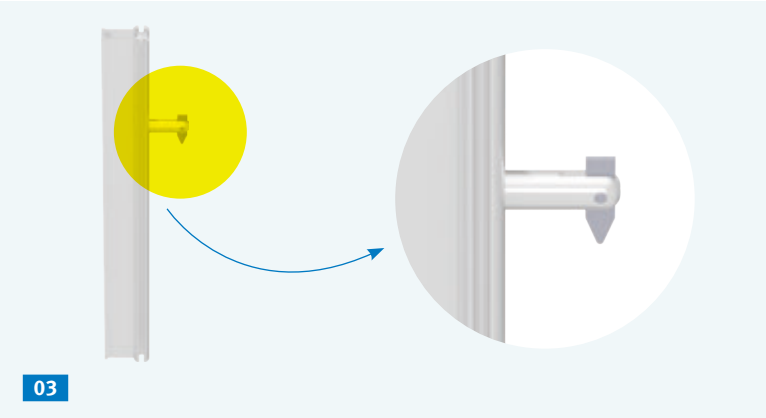
03

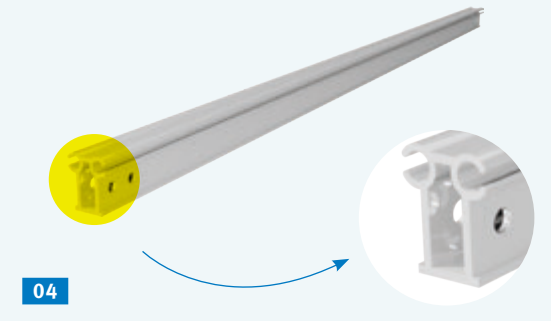
04

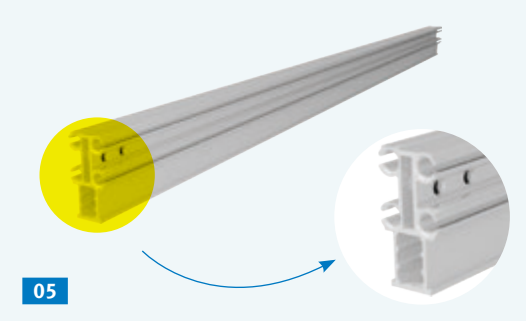
05


06


07
08

FUNCTIONING

01 KEDER RAIL HOLDER

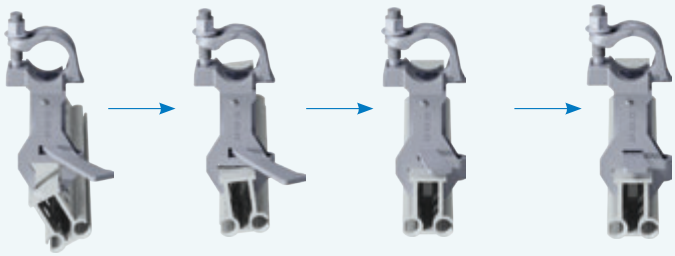

The Keder rail is mounted by means of the Keder rail holder. The Keder rail is positioned by laterally inserting the rail into the fixed part of the holder. By clicking the Keder rail into the end position, the rotatable part of the holder closes automatically and embraces the Keder rail. Keder rail and holder are secured non-positively and positively by a hammer blow on the wedge.
The Keder rail is continuously variable - regardless of position and number of Keder rail holders. An installation is possible at any construction stage. Due to the Keder rail's robust construction, holders are required only every 2 metres. As a result, the number of Keder rail holders can be reduced by 1/3, thereby significantly saving installation time.

FIG.	DESIGNATION		DIMENSIONS L/H×W [m]	WEIGHT approx. [kg]	BAY LENGTH [m] *		ARTICLE NO.	PRICE [€]
01	**Keder rail holder** steel, hot-dip galvanised — continuously variable attachment of the Keder rail onto the scaffolding — distance of Keder holders from one another max. 2.00 m	wrench size 19		1.1			47 99 000	**26.30**
		wrench size 22		1.1			47 99 015	**26.30**
02	**Keder rail holder, 360° rotatable** ⊕ steel, hot-dip galvanised — see item 01 — for flexible connection of Keder rails	wrench size 19		1.4			47 99 019	**28.35**
03	**Keder rail with tilting pin** ⊕ aluminium		0.50	1.8			47 75 050	**17.95**
04	**Keder rail** aluminium — with boreholes on both sides for accommodating Keder rail longitudinal connectors — extremly sturdy aluminium profile, allowing for fewer connection points at scaffolding Other dimensions available upon request.		1.80	5.4			47 75 180	**54.30**
			2.30	6.0			47 75 230	**72.05**
			3.00	9.0			47 75 300	**75.05**
			4.00	12.0			47 75 400	**97.60**
			5.00	15.0			47 75 500	**116.25**
			6.00	18.0			47 75 600	**139.35**
05	**Keder rail wall profile** ⊕ aluminium — see item 04 — Keder groove on both sides — for appropriate connectors ref. to page 21, item 06		2.00	9.5			47 76 200	**87.05**
			2.50	11.9			47 76 250	**107.50**
			3.00	14.3			47 76 300	**127.95**
06	**Keder rail longitudinal connector** steel, hot-dip galvanised, incl. screws — for Keder rail extension 04			1.3			47 99 014	**17.55**
07	**Eave ledger** steel Ø 38.3 mm, hot-dip galvanised — attachment point for Keder tarpaulins at the eaves section — attachment by means of putlog couplers, eave ledger connection (see p. 20/21) or 03 Keder rail with tilting pin		2.57	4.7			47 45 257	**19.95**
08	**Guardrail** steel Ø 38.3 mm, hot-dip galvanised — serves as attachment point of the Keder tarpaulins at the eave section — attachment as with 07 eave ledger		2.50	4.1			20 60 250	**16.00**

*** BAY LENGTHS** Alfix 2.57 m Unifix 2.50 m

APPLICATION EXAMPLE
03 KEDER RAIL WITH TILTING PIN and **EAVE LEDGER CONNECTION** (see p. 20/ 21) for attaching the eave ledgers in order to fasten the roof tarpaulin in the eaves section also when using Keder rails. If an eave ledger connection is inserted into the upper profile of the Keder rail, the wall tarpaulin can be secured by means of a further eave ledger.

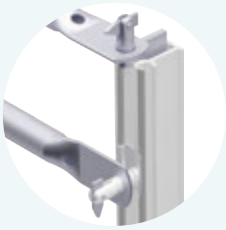

APPLICATION EXAMPLE
02 KEDER RAIL HOLDER 360°
05 KEDER RAIL WALL PROFILE

TECHNICAL DATA

Benefits of the ALFIX Temporary Roof VARIO

Professional construction and weather-independent planning are important for the success of your event.
The *ALFIX Temporary Roof VARIO* is perfect for applications such as PR events - anniversary celebrations - city festivals - trade fair booths - concerts - catering outdoors - and much more.

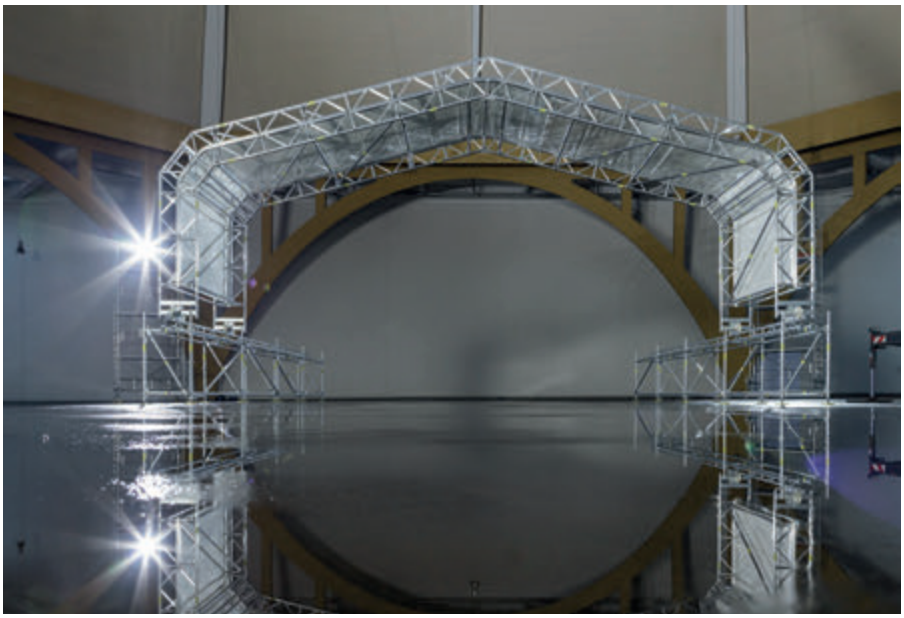

Perfection in detail.

- system-independent application
- modular system
- lightweight, manageable components made of aluminium
- low transportation costs
- fast and economical assembly resulting from mostly screwless connection technique
- perfectly suitable for short-term installation periods
- with spans up to 27.72 m most of the building can be scaffolded during rebuilding or reconstruction
- particularly suitable for mobile halls
- translucent sheeting, additional lighting throughout the daytime not required
- installation of two tarpaulins and one ridge tarpaulin possible: winter roofing with thermal insulation

TECHNICAL DATA	
Static system	— two joint framework
Roof pitch	— 15° or 37.5° for double-pitch roofs, adjustable from 15° to 40° for mono-pitch roofs
Truss distance	— 2.57 m or 2.50 m
Roof girder	— telescopic three-chord lattice girders — overall height 600 mm, longitudinal grid 750 mm — top / bottom chord as well as vertical rods, scaffold tubing Ø 48.3 mm — center chord made of Keder profile with two longitudinal slots on each side
Sheeting	— polyester, approx. 590 g/m², with weld-attached rubber keder — flame resistant DIN 4102 B1
Roof and wall bracing	— longitudinal and diagonal ledgers with self-locking claws
Construction height	— up to 20 m above ground - according to standard structural analysis; for greater heights - a separate structural analysis is required
Span - stationary	— up to 27.72 m (outer edge of roof girder)
Span - mobile	— up to 16.13 m (outer edge of roof girder)
Snow load assumption	— 0.25 kg/m²
Dead weight	— approx. 10 kg/m²

OVERVIEW OF BAYS

Representation without Keder tarpaulins

Example: span 13.23 m

For detailed instructions on assembly of connecting elments please refer to the respective Instructions for Assembly and Use at *www.alfix-systems.com*

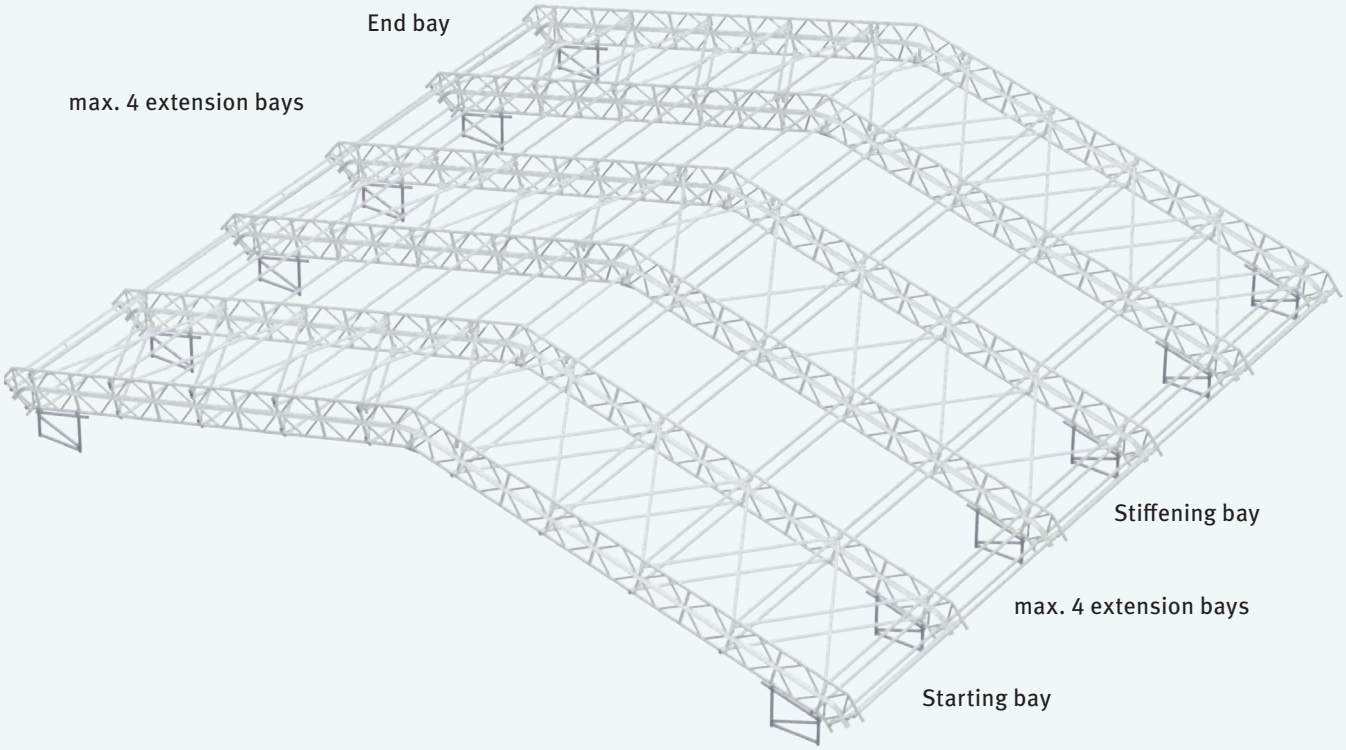

Roof components

01 Diagonal ledger
02 Longitudinal ledger
03 Ridge ledger
04 Eave bracing

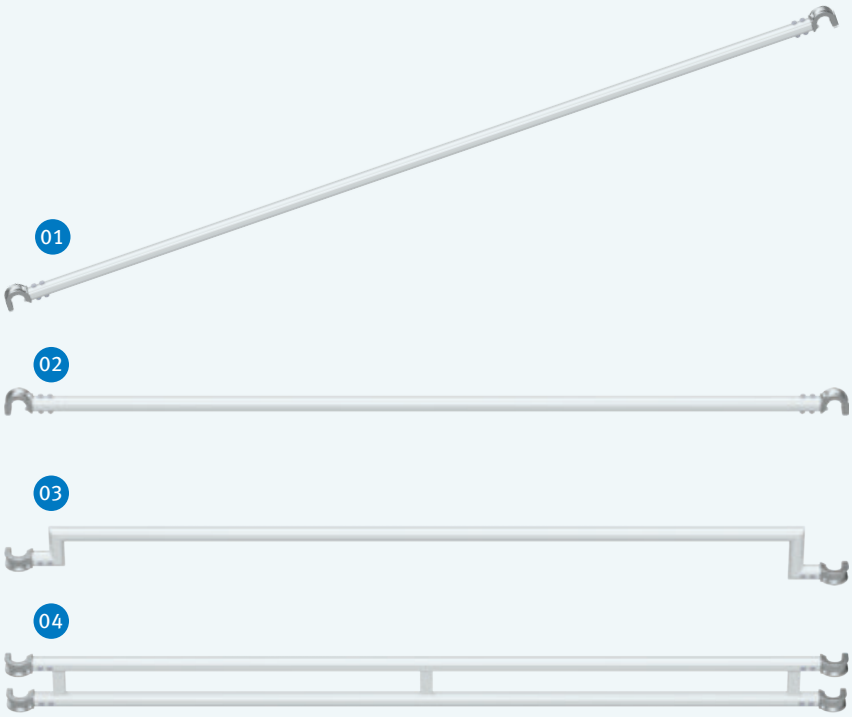

REPRESENTATION OF HEIGHT DIFFERENCES

Double-pitch roof

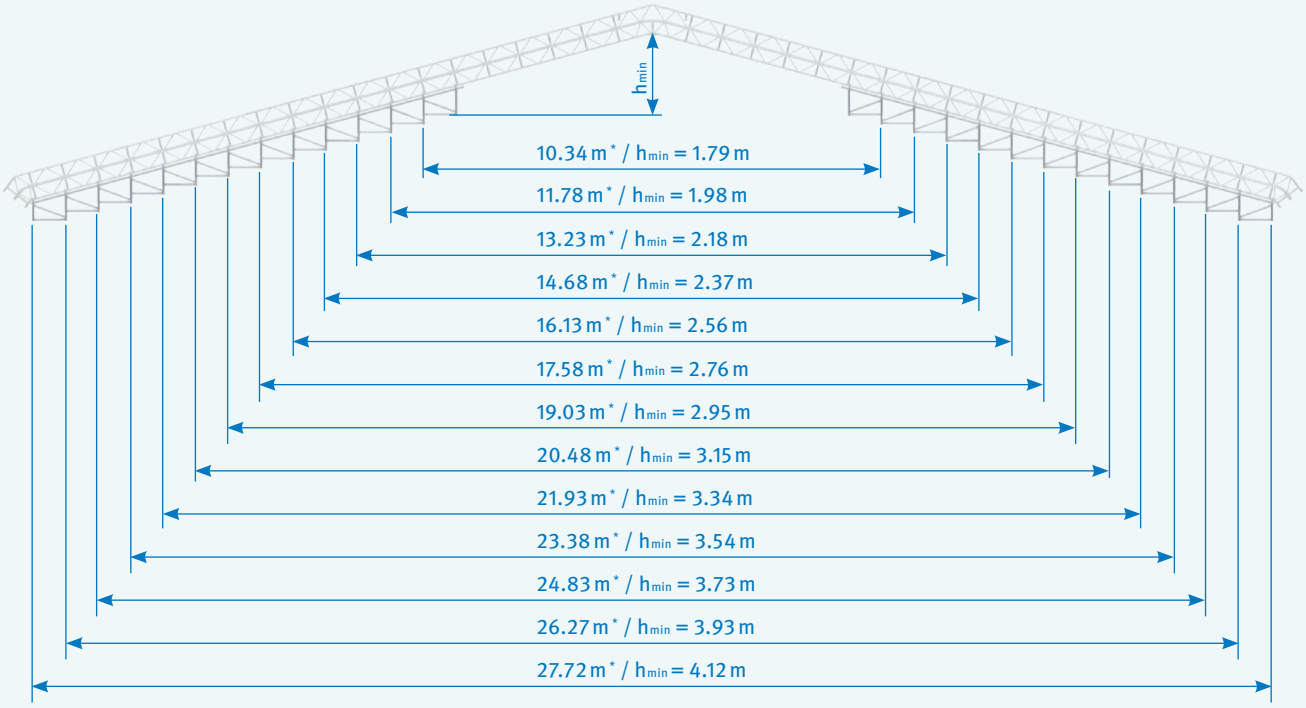

* Span

Mono-pitch roof

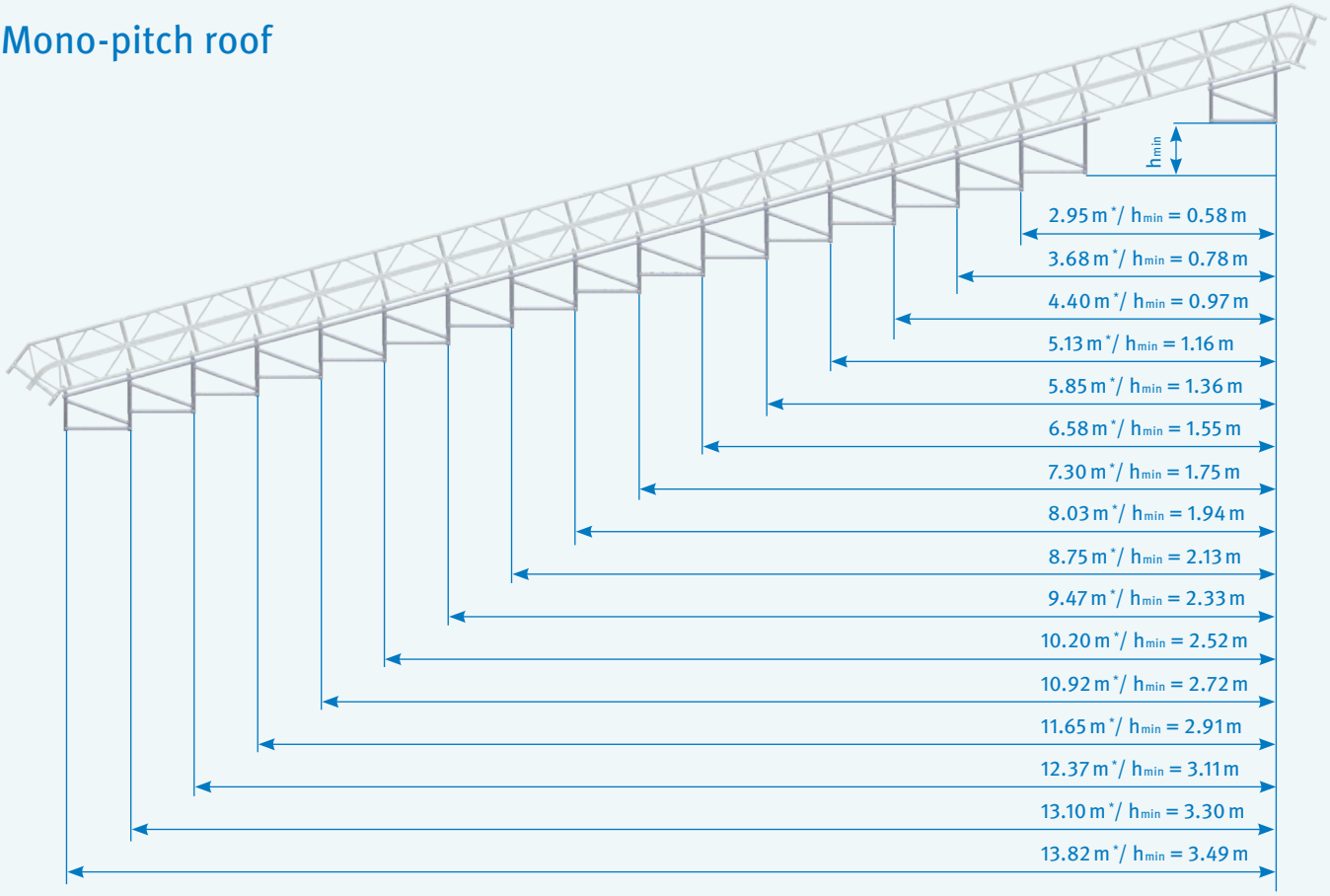

* Span

CALCULATION EXAMPLE

Building dimensions: width 14.00 m, length 23.00 m

- span 16.13 m (building dimension
  + 2 x wall spacing
  + 2 x scaffold width 0.73 m)
- roof length 25.70 m
  (10 bays, 2.57 m each)
  incl. overhang on gable side
- roof area 414.54 m²
- structurally caused projection of the support scaffolding above the last anchorage 6.00 m

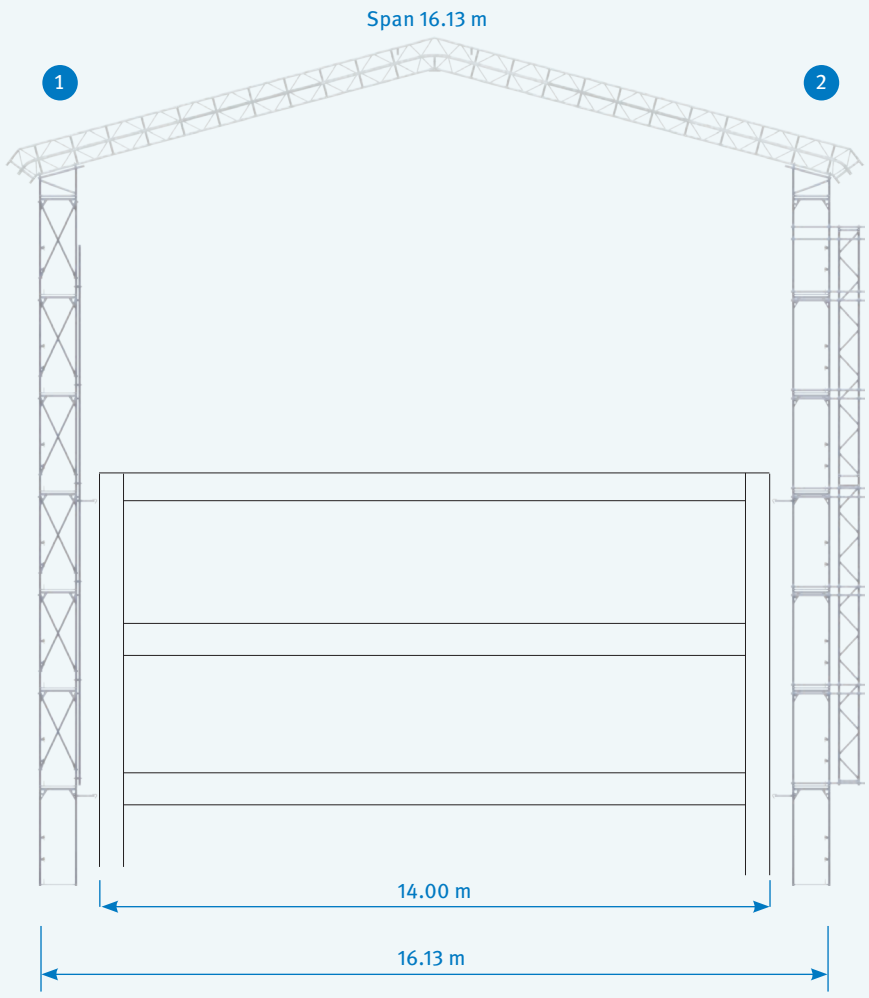

01 Cantilever bracing - version 1

02 Cantilever bracing - version 2

Calculation of construction time:

(based on empirical values)

For information on the structural design of support scaffolding, anchorage and further details necessary for assembly and dismantling operations please refer to the Instructions for Assembly and Use of the ALFIX Temporary Roof VARIO at *www.alfix-systems.com*.

CONSTRUCTION TIME WITH A 4-MAN TEAM:

414.54 m² ÷ ø 3.5 m²/h* = **118.44 h**

* (estimated time for assembly and dismantling 2.5 m² to 4.5 m² per hour / per man = Ø 3.5 m²/h)

SUBDIVIDED INTO:

2/3 assembly = 78.96 h ÷ 4-man team = **19.74 h**

1/3 dismantling = 39.48 h ÷ 4-man team = **9.87 h**

Furthermore, the additional bracing and anchorage of the supporting structure must be calculated with at least 35% surcharge on the price per square metre. This area of the scaffolding (cantilever) corresponds to the [projection of supporting structure above the last anchorage x 2] x [scaffold length] and measures up to 308.40 m² per building side in the example provided. Crane costs must also be added, which dependent on whether the roof bays can be pre-assembled (if local conditions allow this) or must be positioned individually.

Please note that assembly time significantly depends on local conditions. Stated values are just guidelines.

No responsibility is taken for the correctness of the data given.

MATERIAL REQUIREMENTS TABLE

COMPONENT + WEIGHT + UNIT PRICE	[kg]	[€]	SPAN* [m] 10.34	11.78	13.23	14.68	16.13	17.58	19.03	20.48	21.93	23.38	24.83	26.27	27.72
Starting bay (bay length 2.57 m)															
Ridge girder 4.60 m	44.1	**629.10**	2	2	2	2	2	2	2	2	2	2	2	2	2
Roof girder 2.25 m	24.0	**299.95**	4				4								
Roof girder 3.00 m	30.8	**377.65**		4			4	8	4	4			8	4	
Roof girder 3.75 m	37.5	**457.60**			4				4		4		4	8	12
Roof girder 4.50 m	44.2	**542.90**				4				4	4	8			
Roof girder corner section 37.5°	16.3	**247.50**	4	4	4	4	4	4	4	4	4	4	4	4	4
Longitudinal ledger	4.7	**65.70**	18	22	22	26	26	30	30	34	34	38	38	42	42
Diagonal ledger 0.75 m	5.0	**59.10**	0	6	0	6	0	6	0	6	0	6	0	6	0
Diagonal ledger 1.50 m	5.4	**70.75**	20	20	26	26	32	32	38	38	44	44	50	50	56
Ridge ledger	5.1	**88.35**	1	1	1	1	1	1	1	1	1	1	1	1	1
Eave bracing	9.5	**149.85**	2	2	2	2	2	2	2	2	2	2	2	2	2
Putlog coupler	0.8	**7.00**	4	4	4	4	4	4	4	4	4	4	4	4	4
Eave ledger	4.7	**19.95**	2	2	2	2	2	2	2	2	2	2	2	2	2
Girder support 0.73 m	14.0	**109.20**	4	4	4	4	4	4	4	4	4	4	4	4	4
Head strut 8.20 m	56.7	**762.15**								4	4	4	4	4	4
Swivel coupler	1.0	**10.80**	8	8	8	8	8	8	8	20	20	20	20	20	20
Sponge rubber Roof girder seal		**1.10**	8	8	8	8	12	12	12	12	12	12	16	16	16
Keder tarpaulin 8.00 × 2.53 m	12.0	**264.15**		2	2					1	1				
Keder tarpaulin 10.00 × 2.53 m	15.0	**330.20**				2	2			2	2	3	3	1	1
Keder tarpaulin 12.00 × 2.53 m	17.0	**396.20**	1					2	2					2	2
Scaffold rope 2.50 m		**1.20**		4	4	4	4	4	4	8	8	8	8	8	8
Quick strap fastener		**1.30**	14	14	14	14	14	14	14	14	14	14	14	14	14
Locking pin		**1.10**	8	8	8	8	8	8	8	8	8	8	8	8	8
Total weight approx. [kg]			551.7	655.9	663.9	766.7	790.3	891.5	899.5	1243.1	1251.1	1350.9	1374.9	1475.7	1483.7
Total price [€]			7,370.35	8,768.15	8,825.15	10,248.55	10,528.95	11,978.85	11,921.85	16,585.30	16,642.30	17,999.65	18,249.65	19,651.55	19,708.55

Starting bay (bay length 2.50 m)

Keder tarpaulin 8.00 × 2.46 m	12.0	**264.15**		2	2					1	1				
Keder tarpaulin 10.00 × 2.46 m	15.0	**330.20**				2	2			2	2	3	3	1	1
Keder tarpaulin 12.00 × 2.46 m	17.0	**396.20**	1					2	2					2	2
Total weight approx. [kg]			546.4	649.2	657.6	759.0	783.0	882.8	891.2	1233.4	1241.8	1340.2	1364.6	1464.0	1472.4
Total price [€]			7,362.45	8,760.25	8,817.25	10,240.65	10,521.05	11,913.95	11,970.95	16,577.40	16,634.40	17,991.75	18,241.75€	19,643.65	19,700.65

*only applicable for double-pitch roof 15° on support scaffolding

Extension bay (bay length 2.57 m)

COMPONENT + WEIGHT + UNIT PRICE	[kg]	[€]	SPAN* [m] 10.34	11.78	13.23	14.68	16.13	17.58	19.03	20.48	21.93	23.38	24.83	26.27	27.72
Ridge girder 4.60 m	44.1	629.10	1	1	1	1	1	1	1	1	1	1	1	1	1
Roof girder 2.25 m	24.0	299.95	2				2								
Roof girder 3.00 m	30.8	377.65		2			2	4	2	2			4	2	
Roof girder 3.75 m	37.5	457.60			2				2		2		2	4	6
Roof girder 4.50 m	44.2	542.90				2				2	2	4			
Roof girder corner section 37.5°	16.3	247.50	2	2	2	2	2	2	2	2	2	2	2	2	2
Longitudinal ledger	4.7	65.70	20	24	24	28	28	32	32	36	36	40	40	44	44
Diagonal ledger 0.75 m	5.0	59.10													
Diagonal ledger 1.50 m	5.4	70.75													
Ridge ledger	5.1	88.35	1	1	1	1	1	1	1	1	1	1	1	1	1
Eave bracing	9.5	149.85													
Putlog coupler	0.8	7.00	2	2	2	2	2	2	2	2	2	2	2	2	2
Eave ledger	4.7	19.95	2	2	2	2	2	2	2	2	2	2	2	2	2
Girder support 0.73 m	14.0	109.20	2	2	2	2	2	2	2	2	2	2	2	2	2
Head strut 8.20 m	56.7	762.15								2	2	2	2	2	2
Swivel coupler	1.0	10.80	4	4	4	4	4	4	4	10	10	10	10	10	10
Sponge rubber Roof girder seal		1.10	4	4	4	4	6	6	6	6	6	6	8	8	8
Keder tarpaulin 8.00 × 2.53 m	12.0	264.15		2	2					1	1				
Keder tarpaulin 10.00 × 2.53 m	15.0	330.20				2	2			2	2	3	3	1	1
Keder tarpaulin 12.00 × 2.53 m	17.0	396.20	1					2	2					2	2
Scaffold rope 2.50 m		1.20		4	4	4	4	4	4	8	8	8	8	8	8
Quick strap fastener		1.30	14	14	14	14	14	14	14	14	14	14	14	14	14
Locking pin		1.10	4	4	4	4	4	4	4	4	4	4	4	4	4
Total weight approx. [kg]			279.8	338.0	332.6	389.6	392.0	447.2	441.8	620.2	614.8	668.8	684.8	726.4	721.0
Total price [€]			3,821.85	4,639.75	4,536.85	5,365.15	5,373.95	6,186.95	6,084.05	8,506.30	8,403.40	9,165.65	9,329.85	9,976.75	9,873.85

Extension bay (bay length 2.50 m)

Keder tarpaulin 8.00 × 2.46 m	12.0	264.15		2	2					1	1				
Keder tarpaulin 10.00 × 2.46 m	15.0	330.20				2	2			2	2	3	3	1	1
Keder tarpaulin 12.00 × 2.46 m	17.0	396.20	1					2	2					2	2
Total weight approx. [kg]			276.7	334.1	329.1	385.3	388.1	442.5	437.5	615.1	610.1	663.3	679.7	720.5	715.5
Total price [€]			3,813.95	4,631.85	4,528.95	5,357.25	5,366.05	6,179.05	6,076.15	8,498.40	8,395.50	9,157.75	9,321.95	9,968.85	9,865.95

*only applicable for double-pitch roof 15° on support scaffolding

MATERIAL REQUIREMENTS TABLE

COMPONENT + WEIGHT + UNIT PRICE	[kg]	[€]	SPAN* [m] 10.34	11.78	13.23	14.68	16.13	17.58	19.03	20.48	21.93	23.38	24.83	26.27	27.72
Stiffening bay (bay length 2.57 m)															
Ridge girder 4.60 m	44.1	629.10	1	1	1	1	1	1	1	1	1	1	1	1	1
Roof girder 2.25 m	24.0	299.95	2				2								
Roof girder 3.00 m	30.8	377.65		2			2	4	2	2			4	2	
Roof girder 3.75 m	37.5	457.60			2				2		2		2	4	6
Roof girder 4.50 m	44.2	542.90				2				2	2	4			
Roof girder corner section 37.5°	16.3	247.50	2	2	2	2	2	2	2	2	2	2	2	2	2
Longitudinal ledger	4.7	65.70	18	22	22	26	26	30	30	34	34	38	38	42	42
Diagonal ledger 0.75 m	5.0	59.10	0	4	0	4	0	4	0	4	0	4	0	4	0
Diagonal ledger 1.50 m	5.4	70.75	14	14	18	18	22	22	26	26	30	30	34	34	38
Ridge ledger	5.1	88.35	1	1	1	1	1	1	1	1	1	1	1	1	1
Eave bracing	9.5	149.85	2	2	2	2	2	2	2	2	2	2	2	2	2
Putlog coupler	0.8	7.00	2	2	2	2	2	2	2	2	2	2	2	2	2
Eave ledger	4.7	19.95	2	2	2	2	2	2	2	2	2	2	2	2	2
Girder support 0.73 m	14.0	109.20	2	2	2	2	2	2	2	2	2	2	2	2	2
Head strut 8.20 m	56.7	762.15								2	2	2	2	2	2
Swivel coupler	1.0	10.80	4	4	4	4	4	4	4	10	10	10	10	10	10
Sponge rubber Roof girder seal		1.10	4	4	4	4	6	6	6	6	6	6	8	8	8
Keder tarpaulin 8.00 × 2.53 m	12.0	264.15		2	2					1	1				
Keder tarpaulin 10.00 × 2.53 m	15.0	330.20				2	2			2	2	3	3	1	1
Keder tarpaulin 12.00 × 2.53 m	17.0	396.20	1					2	2					2	2
Scaffold rope 2.50 m		1.20		4	4	4	4	4	4	8	8	8	8	8	8
Quick strap fastener		1.30	14	14	14	14	14	14	14	14	14	14	14	14	14
Locking pin		1.10	4	4	4	4	4	4	4	4	4	4	4	4	4
Total weight approx. [kg]			365.0	444.8	439.4	518.0	520.4	597.2	591.8	791.8	786.4	862.0	864.6	941.2	935.8
Total price [€]			4,980.65	6,081.55	5,978.65	7,089.95	7,098.75	8,194.75	8,091.85	10,797.10	10,694.20	11,739.45	11,733.05	12,833.55	12,730.65
Stiffening bay (bay length 2.50 m)															
Keder tarpaulin 8.00 × 2.46 m	12.0	264.15		2	2					1	1				
Keder tarpaulin 10.00 × 2.46 m	15.0	330.20				2	2			2	2	3	3	1	1
Keder tarpaulin 12.00 × 2.46 m	17.0	396.20	1					2	2					2	2
Total weight approx. [kg]			360.3	438.9	433.9	511.3	514.1	589.7	584.7	783.5	778.5	852.9	855.9	931.3	926.3
Total price [€]			4,972.75	6,073.65	5,970.75	7,082.05	7,090.85	8,186.85	8,083.95	10,789.20	10,686.30	11,731.55	11,725.15	12,825.65	12,722.75

*only applicable for double-pitch roof 15° on support scaffolding

End bay (bay length 2.57 m)

COMPONENT + WEIGHT + UNIT PRICE	[kg]	[€]	SPAN* [m] 10.34	11.78	13.23	14.68	16.13	17.58	19.03	20.48	21.93	23.38	24.83	26.27	27.72
Ridge girder 4.60 m	44.1	629.10	1	1	1	1	1	1	1	1	1	1	1	1	1
Roof girder 2.25 m	24.0	299.95	2				2								
Roof girder 3.00 m	30.8	377.65		2			2	4	2	2			4	2	
Roof girder 3.75 m	37.5	457.60			2				2		2		2	4	6
Roof girder 4.50 m	44.2	542.90				2				2	2	4			
Roof girder corner section 37.5°	16.3	247.50	2	2	2	2	2	2	2	2	2	2	2	2	2
Longitudinal ledger	4.7	65.70	18	22	22	26	26	30	30	34	34	38	38	42	42
Diagonal ledger 0.75 m	5.0	59.10	0	6	0	6	0	6	0	6	0	6	0	6	0
Diagonal ledger 1.50 m	5.4	70.75	20	20	26	26	32	32	38	38	44	44	50	50	56
Ridge ledger	5.1	88.35	1	1	1	1	1	1	1	1	1	1	1	1	1
Eave bracing	9.5	149.85	2	2	2	2	2	2	2	2	2	2	2	2	2
Putlog coupler	0.8	7.00	2	2	2	2	2	2	2	2	2	2	2	2	2
Eave ledger	4.7	19.95	2	2	2	2	2	2	2	2	2	2	2	2	2
Girder support 0.73 m	14.0	109.20	2	2	2	2	2	2	2	2	2	2	2	2	2
Head strut 8.20 m	56.7	762.15								2	2	2	2	2	2
Swivel coupler	1.0	10.80	4	4	4	4	4	4	4	10	10	10	10	10	10
Sponge rubber Roof girder seal		1.10	4	4	4	4	6	6	6	6	6	6	8	8	8
Keder tarpaulin 8.00 × 2.53 m	12.0	264.15		2	2					1	1				
Keder tarpaulin 10.00 × 2.53 m	15.0	330.20				2	2			2	2	3	3	1	1
Keder tarpaulin 12.00 × 2.53 m	17.0	396.20	1					2	2					2	2
Scaffold rope 2.50 m		1.20		4	4	4	4	4	4	8	8	8	8	8	8
Quick strap fastener		1.30	14	14	14	14	14	14	14	14	14	14	14	14	14
Locking pin		1.10	4	4	4	4	4	4	4	4	4	4	4	4	4
Total weight approx. [kg]			397.4	488.0	482.6	572.0	574.4	662.0	656.6	867.4	862.0	948.4	951.0	1038.4	1033.0
Total price [€]			5,405.15	6,647.55	6,544.65	7,797.45	7,806.25	9,043.75	8,940.85	11,787.60	11,684.70	12,871.45	12,865.05	14,107.05	14,004.15

End bay (bay length 2.50 m)

Keder tarpaulin 8.00 × 2.46 m	12.0	264.15		2	2					1	1				
Keder tarpaulin 10.00 × 2.46 m	15.0	330.20				2	2			2	2	3	3	1	1
Keder tarpaulin 12.00 × 2.46 m	17.0	396.20	1					2	2					2	2
Total weight approx. [kg]			392.1	481.3	476.3	564.3	567.1	653.3	648.3	857.7	852.7	937.7	940.7	1026.7	1021.7
Total price [€]			5,397.25	6,639.65	6,536.75	7,789.55	7,798.35	9,035.85	8,932.95	11,779.70	11,676.80	12,863.55	12,857.15	14,099.15	13,996.25

*only applicable for double-pitch roof 15° on support scaffolding

www.alfix-systems.com

ALFIX GmbH
Langhennersdorfer Straße 15
D-09603 Großschirma

Phone +49 (0) 37328 / 800-100
Fax +49 (0) 37328 / 800-199
eMail: info@alfix-systems.com

SALE OF:
- Working and safety scaffolds
- Mobile scaffold towers
- Temporary roofs
- Chimney scaffolds
- Accessories

LEASING OF:
- Working and safety scaffolds
- Mobile scaffold towers
- Temporary roofs

Edition: May 2019