ALFIX®
SECURELY SCAFFOLDED

ALFIX MODUL METRIC

Catalogue

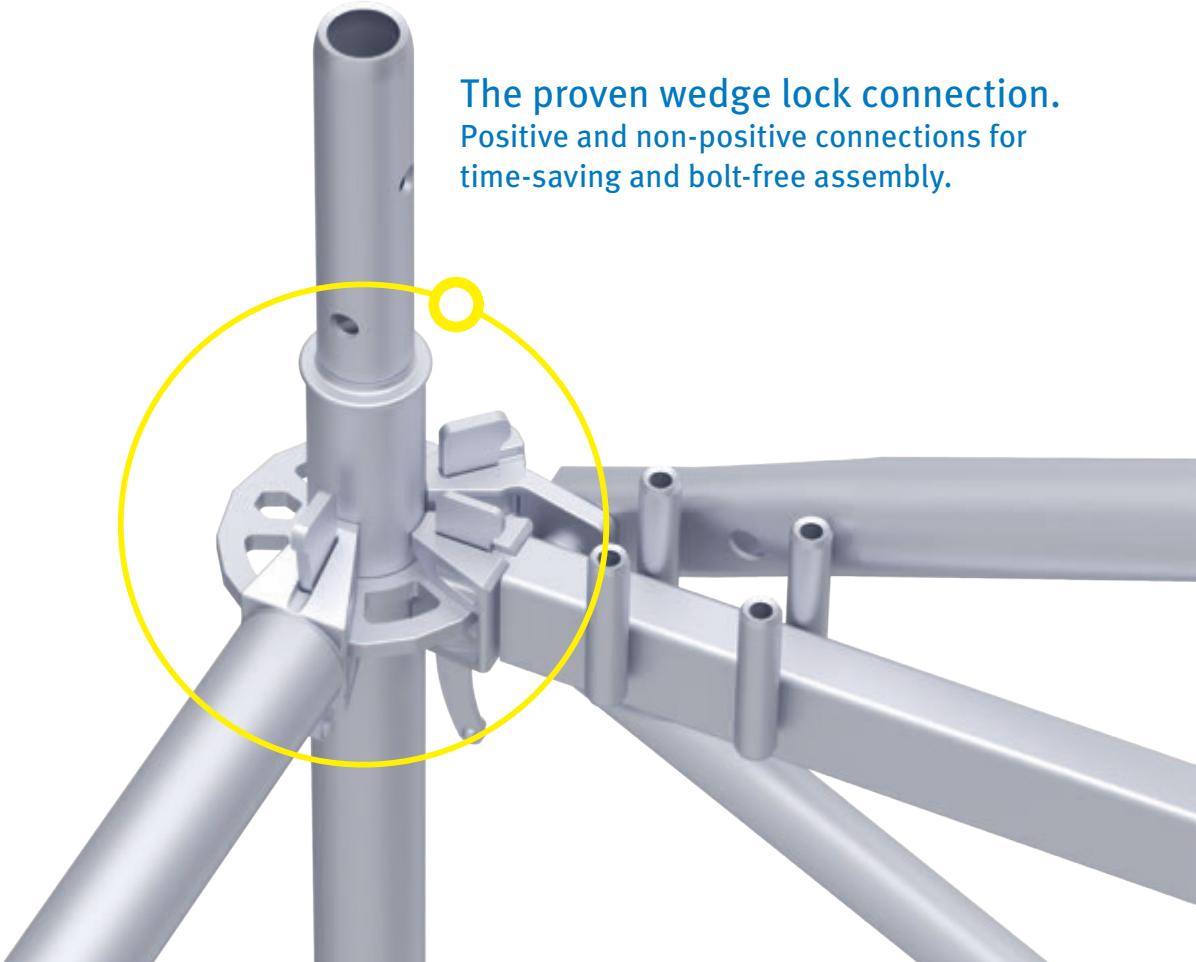

The proven wedge lock connection.
Positive and non-positive connections for time-saving and bolt-free assembly.

TABLE OF CONTENTS

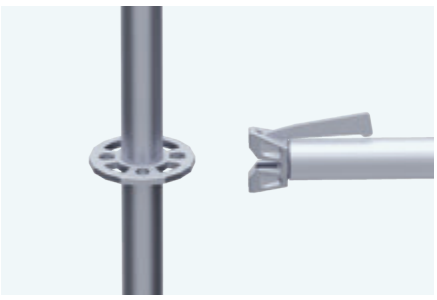

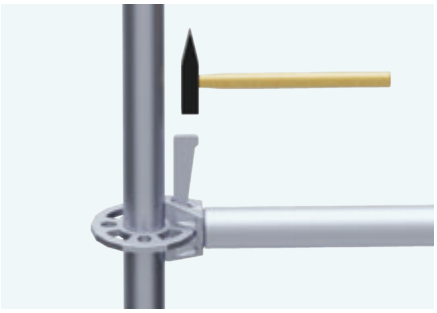

Key element of the ALFIX MODUL METRIC system is the ALFIX modular connector: the rosette. Proven wedge lock connection for time-saving and bolt-free assembly thanks to positive and non-positive connections. Rosettes at every 50 cm with eight openings permit connections at any angle. This design offers a very high fitting performance.

Please refer to technical approval Z-8.22-932 for load-bearing capacity and rigidity of the node connection.

With the publishing of the current catalogue, any previous version becomes invalid.

Catalogue ALFIX MODUL METRIC

Edition: October 2023

ALFIX MODUL METRIC SCAFFOLDING SYSTEM

The „ALFIX MODUL METRIC“ modular scaffolding system offers an impressive range of uses: for façade and industrial scaffolding and support structures. The highest degree of intelligent technology and an easy-to-handle system allow users to quickly assemble economical and versatile scaffolding constructions.

It can be flexibly adapted to accommodate complicated layouts and different heights when scaffolding structures. ALFIX modular systems are available in two versions (ALFIX MODUL MULTI with dimensions of 1.57 - 2.07 - 2.57 - 3.07 m and ALFIX MODUL METRIC with dimensions of 1.50 - 2.00 - 2.50 - 3.00 m).

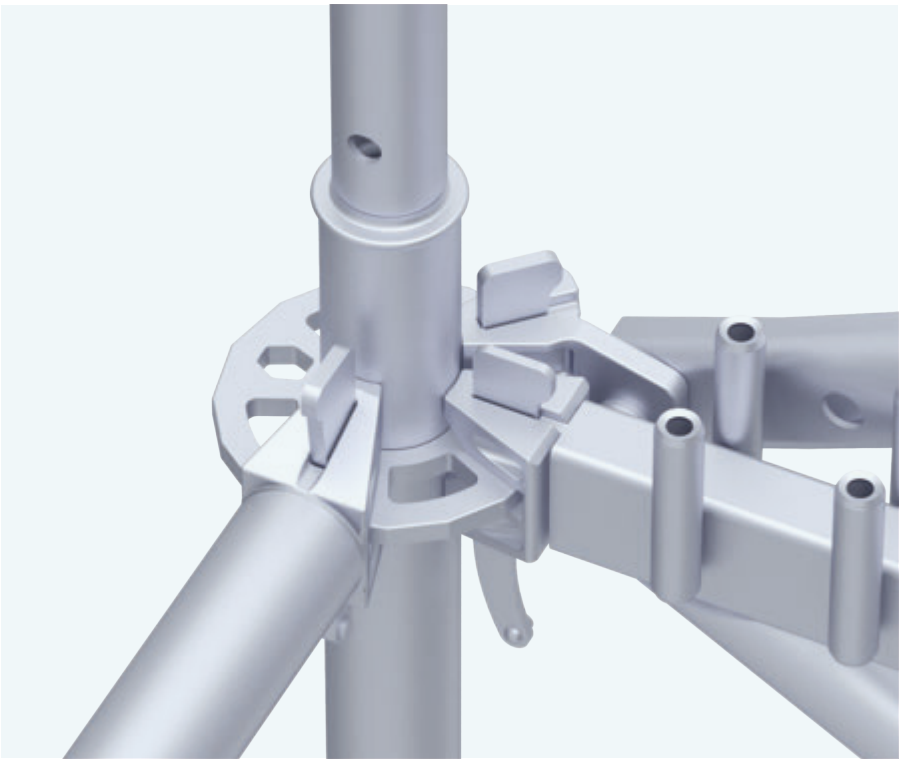

Rosette made of steel with four small openings for right-angled connections (ledgers) and four larger openings for connections at any angle (ledgers and diagonal braces). Please refer to page 38 for detailed information on load-bearing capacity of the rosette.

Technical Approval:

ALFIX MODUL METRIC (Z-8.22-932)

Please refer to approval Z-8.22-932 for assembly versions in façade scaffolding with bay width 0.74 m (load class 3).

VERTICAL SUPPORT ELEMENTS

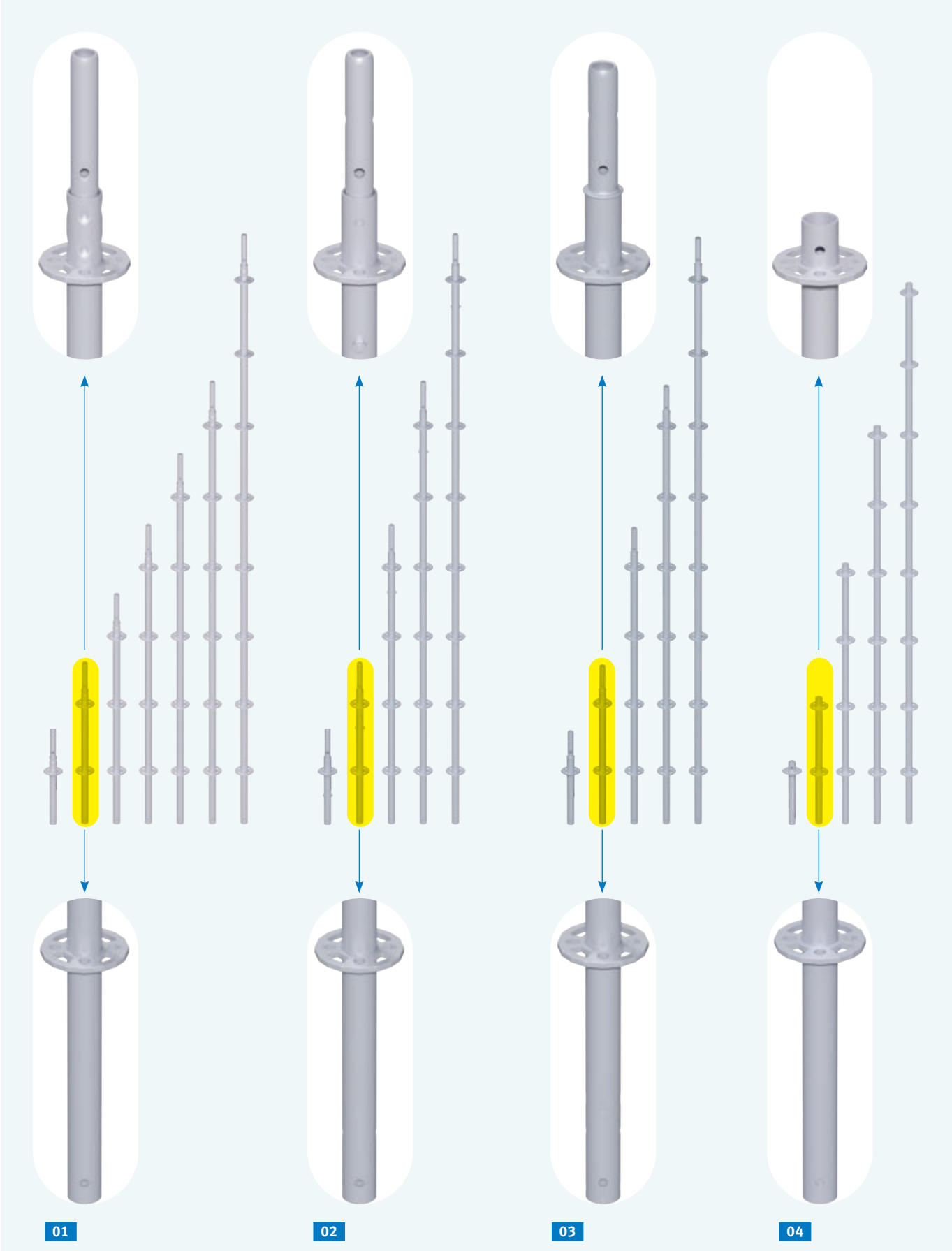

FIG.	DESCRIPTION	DIMENSIONS L/H×W [m]	WEIGHT approx. [kg]	ARTICLE NO.
01	**Standard** with pressed-in tube connector (TC)* steel tube ø 48.3 × 3.2 mm; hot-dip galvanised — with rosettes at every 50 cm — first rosette at 40 cm from the bottom of the standard	0.50	3.2	40 04 050
		1.00	5.5	40 04 100
		1.50	7.7	40 04 150
		2.00	10.1	40 04 200
		2.50	12.3	40 04 250
		3.00	14.6	40 04 300
		4.00	19.2	40 04 400
02	**Standard** with screwed-in tube connector (TC)* steel tube ø 48. × 3.2 mm; hot-dip galvanised — for suspended scaffolding — special screws included — with rosettes at every 50 cm — first rosette at 40 cm from the bottom of the standard	0.50	4.0	40 05 050
		1.00	6.2	40 05 100
		1.50	8.5	40 05 150
		2.00	10.8	40 05 200
		2.50	13.0	40 05 250
		3.00	15.3	40 05 300
		4.00	19.9	40 05 400
03	**Standard** with integrated tube connector (TC)* steel tube ø 48.3 × 3.2 mm; hot-dip galvanised — for suspended scaffolding — with rosettes at every 50 cm — first rosette at 40 cm from the bottom of the standard	0.50	2.9	40 09 050
		1.00	5.1	40 09 100
		1.50	7.4	40 09 150
		2.00	9.6	40 09 200
		2.50	11.9	40 09 250
		3.00	14.1	40 09 300
		4.00	18.6	40 09 400
04	**Top standard** * ⊕ steel tube ø 48.3 × 3.2 mm; hot-dip galvanised — without tube connector (TC) — with rosettes at every 50 cm — first rosette at 40 cm from the bottom of the standard	0.46	1.9	48 30 046
		0.96	4.0	48 30 096
		1.96	8.3	48 30 196
		2.96	12.5	48 30 296
		3.96	16.8	48 30 396

Standards without tube connector available upon request.

* please refer to page 39 for the load-bearing capacity of the standards

APPLICATION EXAMPLE

04 TOP STANDARD for creating a plane deck surface

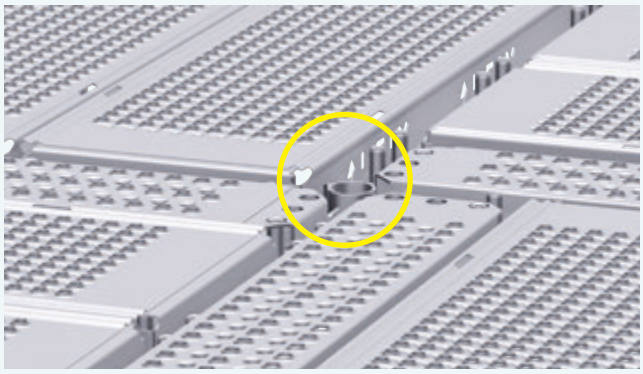

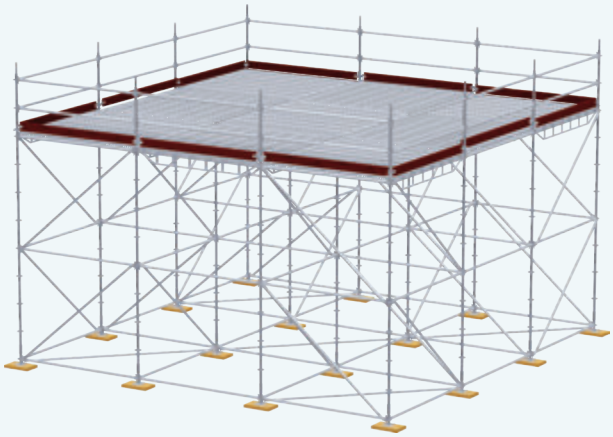

VERTICAL SUPPORT ELEMENTS

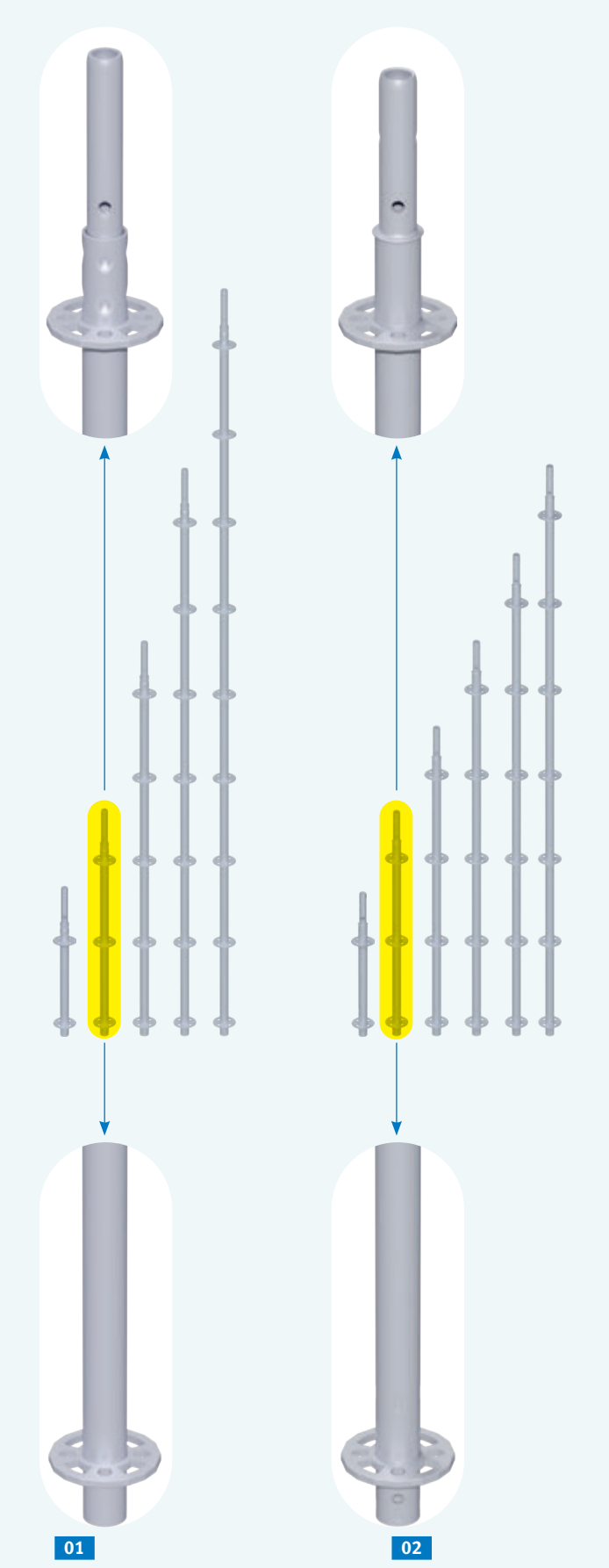

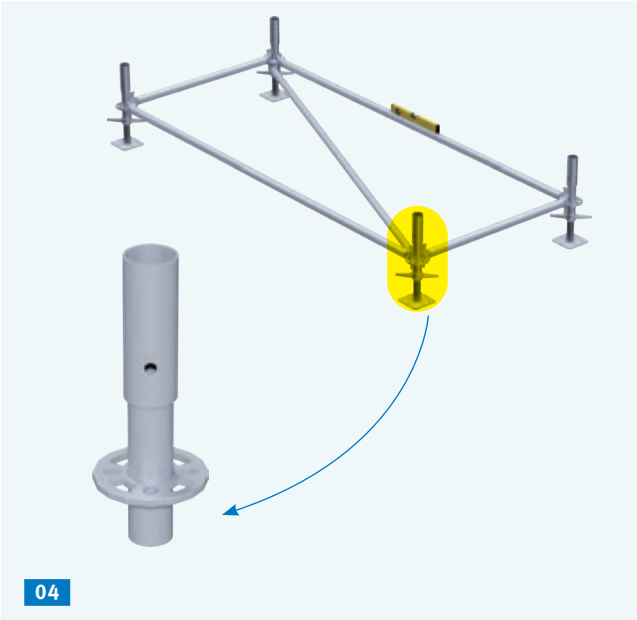

APPLICATION EXAMPLE

02 VERTICAL STARTER STANDARD

— for tube ledger suspension

— first rosette at 7.0 cm from the bottom of the standard

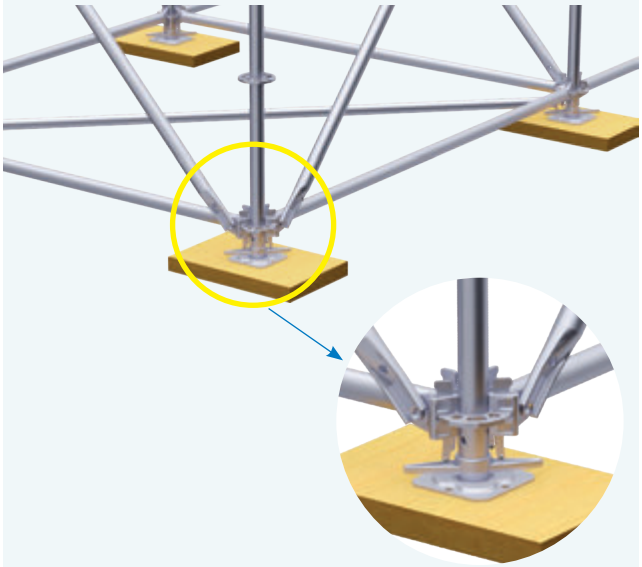

FIG.	DESCRIPTION	DIMENSIONS L/H×W [m]	WEIGHT approx. [kg]	ARTICLE NO.
01	**Vertical starter standard** with pressed-in tube connector (TC)* ⊕ steel tube ø 48.3 × 3.2 mm; hot-dip galvanised — upon request also available with screwed-in TC — with rosettes at every 50 cm — first rosette at 7.0 cm from the bottom of the standard	0.66	3.9	48 15 066
		1.16	6.0	48 15 116
		2.16	10.2	48 15 216
		3.16	13.8	48 15 316
		4.16	14.4	48 15 416
02	**Vertical starter standard** with integrated tube connector (TC)* steel tube ø 48.3 × 3.2 mm; hot-dip galvanised — for suspended scaffolding — with rosettes at every 50 cm — first rosette at 7.0 cm from the bottom of the standard	0.66	4.0	40 08 066
		1.16	6.2	40 08 116
		1.66	8.5	40 08 166
		2.16	10.7	40 08 216
		2.66	13.0	40 08 266
		3.16	15.2	40 08 316
03	**Tube connector** steel tube; hot-dip galvanised; Spare part for standard Spare part for standard with screwed on tube connector	0.52	1.7	83 40 050
	Spare part for standard 0.50 m with screwed on tube connector	0.50	1.6	83 40 051
04	**Base collar** steel; hot-dip galvanised — allows for easy horizontal fitting — standards can be assembled by one person only	0.41	1.8	40 00 041

Standards without tube connector available upon request.

*please refer to page 39 for the load-bearing capacity of the standards

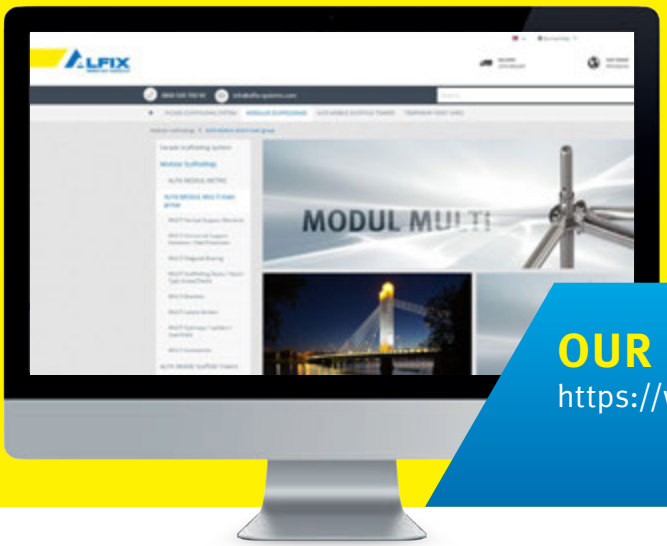

OUR ONLINE CATALOGUE
https://www.alfix-systems.com/en/shop

VERTICAL SUPPORT ELEMENTS

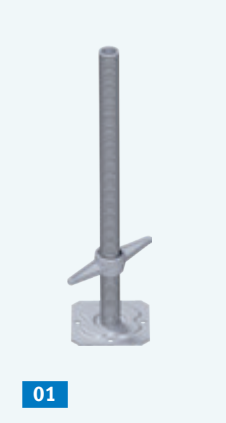

01

02

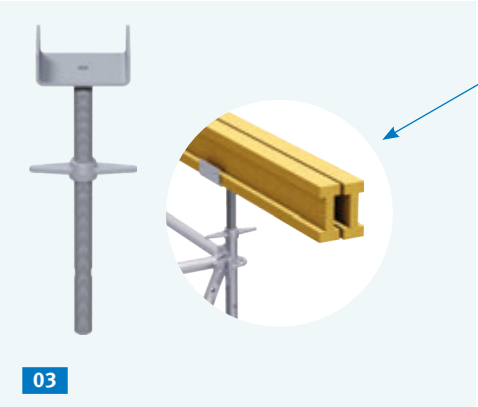

03

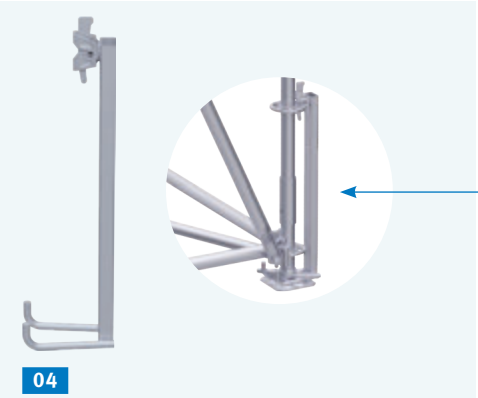

04

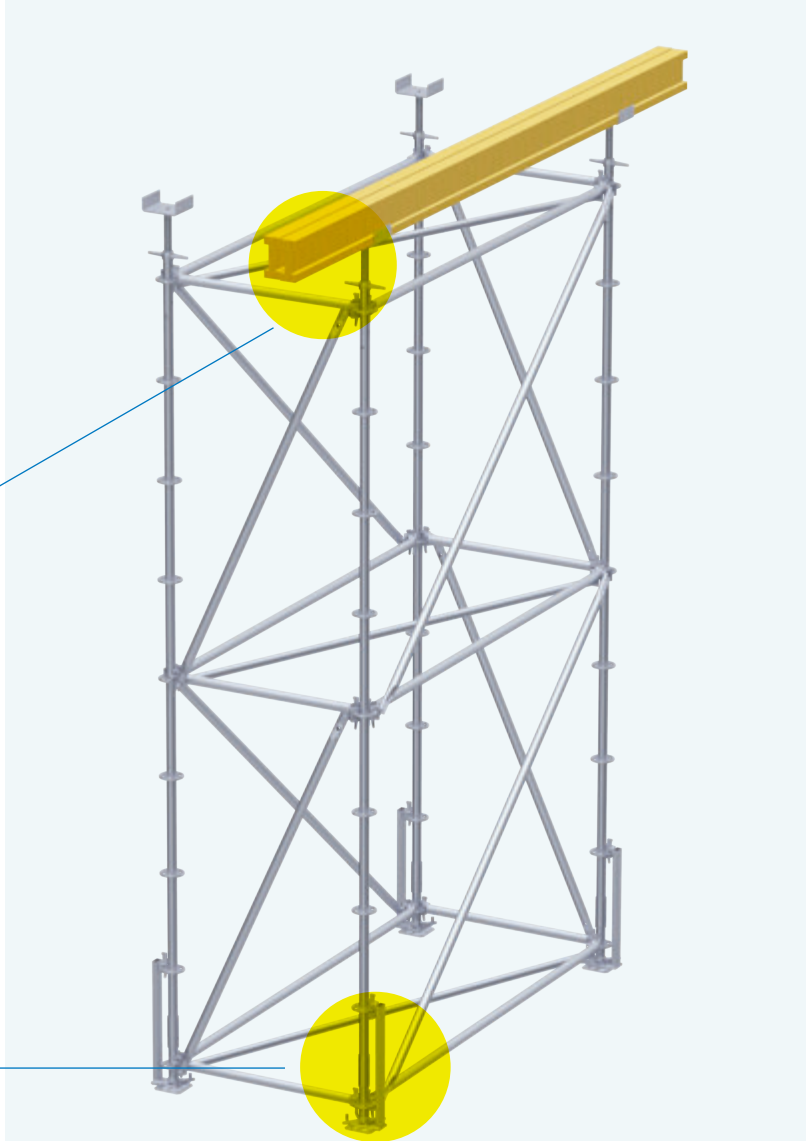

APPLICATION EXAMPLE

03 Head spindle “U” and

04 Locking device for base jack

05

06

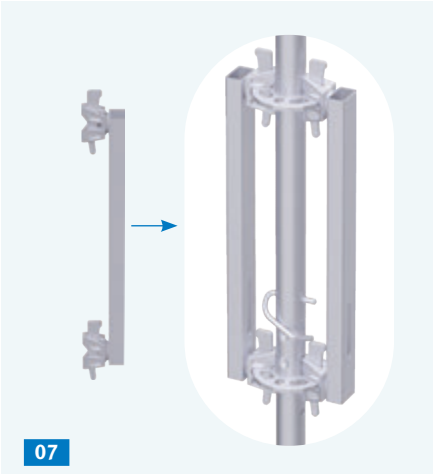

07

FIG.	DESCRIPTION	SPINDLE TRAVEL [m]	DIMENSIONS L/H×W [m]	WEIGHT approx. [kg]	ARTICLE NO.
01	**Base jack** steel; hot-dip galvanised — baseplate 15 × 15 cm — with smooth running tubular spindle and toggle nut — with locking function to prevent unfastening	0.25	0.40	3.0	11 51 040
		0.45	0.60	3.6	11 51 060
		0.60	0.80	4.4	11 51 080
02	**Base jack, swivelling** steel; hot-dip galvanised	0.45	0.60	4.5	11 52 060
03	**Head spindle „U“** ⊕ steel; hot-dip galvanised — opening dimension 174 mm, fork width 160 mm, depth 62 mm — with boreholes for fixing formwork girders	0.45	0.60	6.0	41 59 000
		0.75	1.00	8.0	41 59 100
04	**Locking device for base jack** ⊕ steel; hot-dip galvanised — ensures tight fit of base jack during crane operations		0.65	3.5	41 52 003
05	**Castor** steel; galvanised; wheel type: plastic ø 200 mm — with twinbrake lever — permissible load 10 kN — load centering — wing nut with lock	0.35	0.50	6.5	14 12 007
06	**Flange castor** steel; galvanised; wheel type: plastic ø 200 m — permissible load 7 kN	0.45	0.70	6.7	14 12 005
07	**Suspended scaffolding connector** steel; hot-dip galvanised — for securing the connection of standards — Installation always in pairs!		0.60	3.0	48 75 060
			0.80	3.6	48 75 080
08	**Hexagon bolt** M12 × 60 mm steel; galvanised; incl. hexagon nut M12, self-locking (not shown)			0.05	73 01 260

APPLICATION EXAMPLE

06 Flange castor

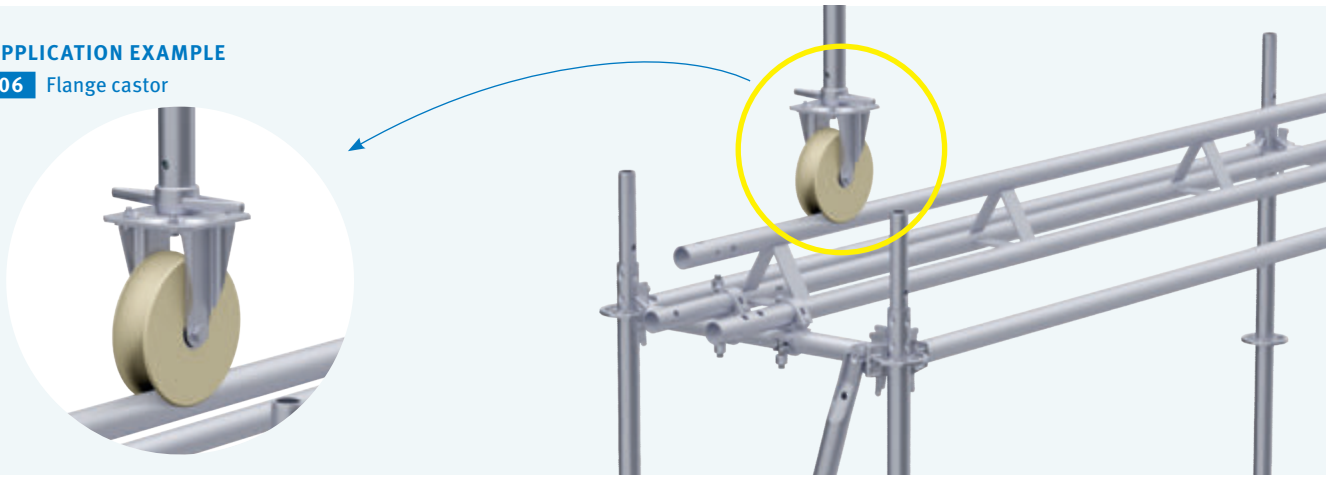

HORIZONTAL SUPPORT ELEMENTS / SIDE PROTECTION

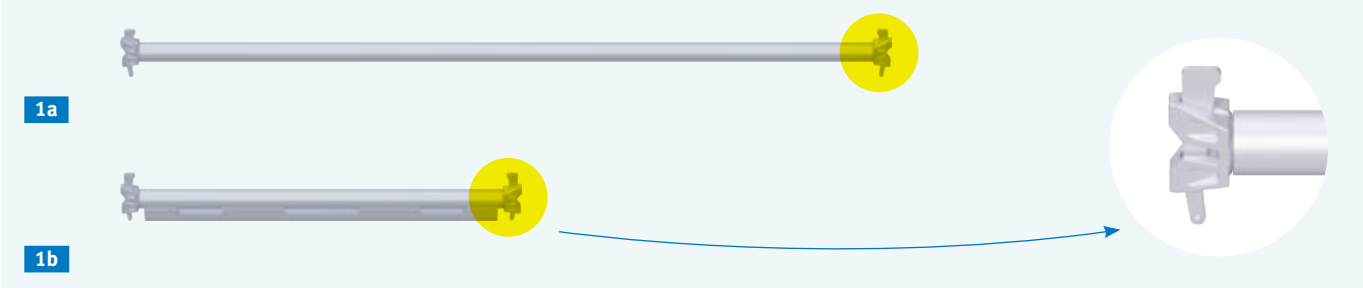

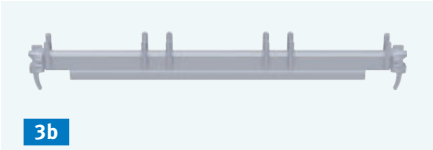

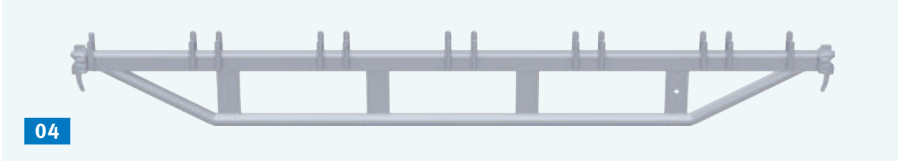

NOTE for all ledger types: WEDGE LOCK CONNECTION
positive and non-positive connections, bolt-free assembly

APPLICATION EXAMPLE

04 2-DECK BEARER (UNIFIX FIXTURE)
05 LIFT-OFF PREVENTER

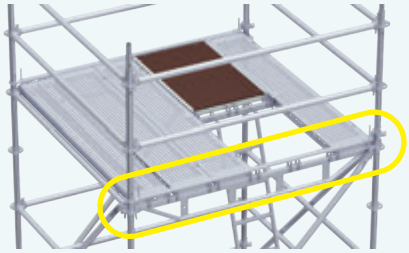

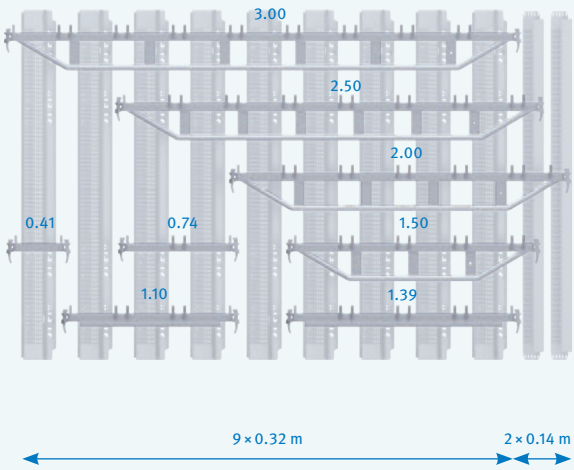

Steel deck 0.32 m and **intermediate deck 0.14 m**

APPLICATION EXAMPLE: LEDGER CONFIGURATION

3a Deck bearer
3b Deck bearer, reinforced
04 2-deck bearer

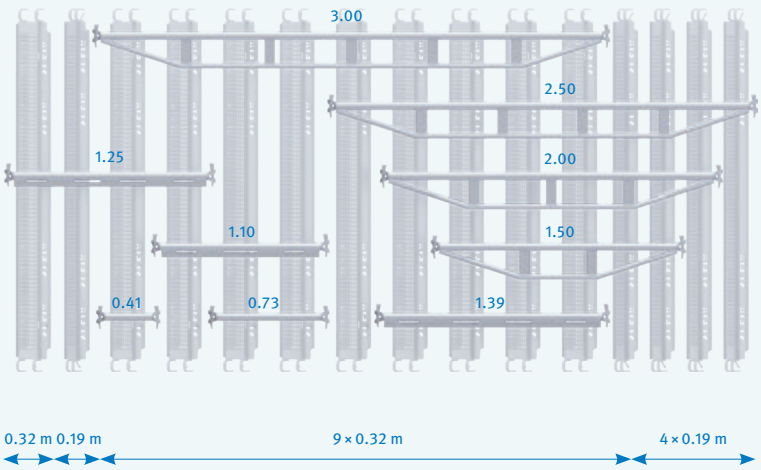

Steel deck with tube fixture 0.32 m and **intermediate deck with tube fixture 0.19 m**

APPLICATION EXAMPLE: LEDGER CONFIGURATION

1b Tube ledger, reinforced
02 Double tube ledger

FIG.	DESCRIPTION		DIMENSIONS L/H×W [m]	WEIGHT approx. [kg]	ARTICLE NO.
01	**Tube ledger** ⊕ steel tube ø 48.3 mm × 3.2 mm; hot-dip galvanised — for use as horizontal connecting element, side protection and - in reinforced design - as deck bearer — colour coding clearly indicates the bay length (see p. 18) — reinforced ledgers are capable of bearing higher loads	1a Tube ledger	0.25	1.4	48 60 025
			0.41	2.0	48 60 040
			0.50	2.4	48 60 050
			0.74	3.2	48 60 074
			0.75	3.2	48 60 075
			1.00	4.2	48 60 100
			1.10	4.4	48 60 110
			1.25	5.1	48 60 125
			1.39	5.6	48 60 140
			1.50	6.0	48 60 150
			2.00	7.9	48 60 200
			2.50	9.7	48 60 250
			3.00	11.5	48 60 300
			4.00	14.1	48 60 400
		1b Tube ledger, reinforced	1.10	6.1	48 61 110
			1.25	7.1	48 61 125
			1.39	7.9	48 61 139
02	**Double tube ledger** ⊕ steel tube ø 48.3 mm × 3.2 mm; hot-dip galvanised — for higher loads — receiving element for decks with tube suspension		1.50	9.7	48 61 150
			2.00	12.9	48 61 200
			2.50	15.9	48 61 250
			3.00	19.3	48 61 300
03	**Deck bearer (UNIFIX fixture)** ⊕ steel; hot-dip galvanised — available in reinforced design (depending on length) — with pins for fitting system decks, requires lift-off prevention against unintentional lifting In case the MODUL METRIC system scaffolding is used as a façade scaffolding and lift-off preventers are assembled, the use of tube ledgers is no longer required (please refer to the standard version given in the respective Technical Approval / Instructions for Assembly and Use).	3a 1-deck	0.41	2.3	48 65 040
		2-deck	0.74	3.9	48 65 074
		3b 3-deck (reinforced)	1.10	6.9	48 65 110
		4-deck (reinforced)	1.39	9.1	48 65 140
04	**2-deck bearer (UNIFIX fixture)** ⊕ steel; hot-dip galvanised — receiving element for system decks		1.50	11.7	48 65 150
			2.00	15.3	48 65 200
			2.50	19.3	48 65 250
			3.00	21.2	48 65 300
05	**Lift-off preventer** ⊕ steel; hot-dip galvanised — ift-off prevention for decks fitted onto deck bearers with UNIFIX fixture (pos. 03 and 04)		0.41	1.4	48 98 041
			0.74	1.4	48 98 074
			1.10	2.1	48 98 110
			1.39	2.3	48 98 140
			1.50	2.9	48 98 150
			2.00	3.9	48 98 200
			2.50	4.8	48 98 250
			3.00	5.7	48 98 300

HORIZONTAL SUPPORT ELEMENTS / SIDE PROTECTION

1a

2a

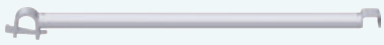

03

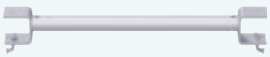

1b

2b

04

APPLICATION EXAMPLE

03 BOARD BEARER WITH TUBE FIXTURE

with system-independent decks

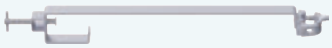

05

06

APPLICATION EXAMPLE

05 RECESS BRACKET HOLDER

Two recess bracket holders are fitted to the decks of each level by means of a tensioning screw. Recess bracket holders can be used for each deck type. The holders must be arranged such that the niche is closed with a suitable deck and that any remaining gaps must not exceed 30 cm. The recess bracket holders features halfcouplers which serve to vertically fit standards for two or more levels, which accommodate the brackets at the respective height.

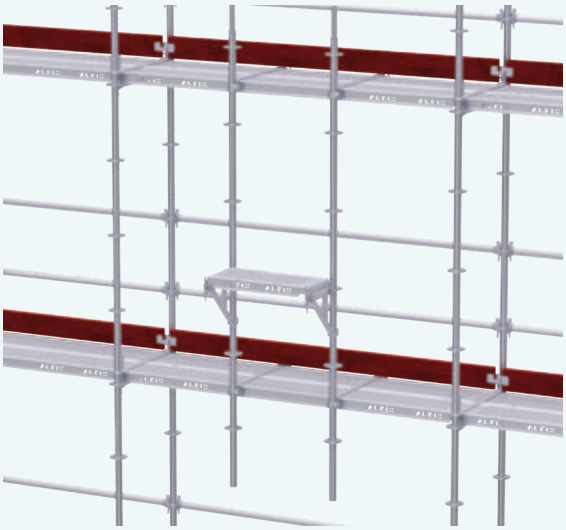

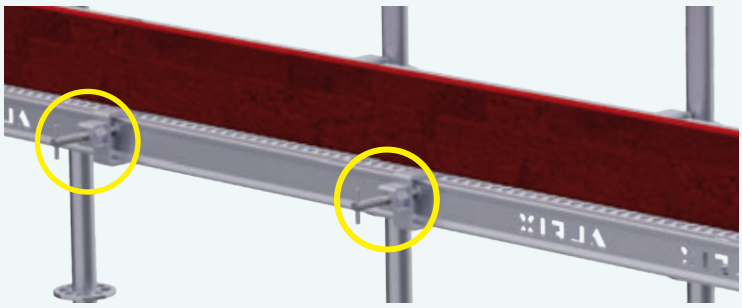

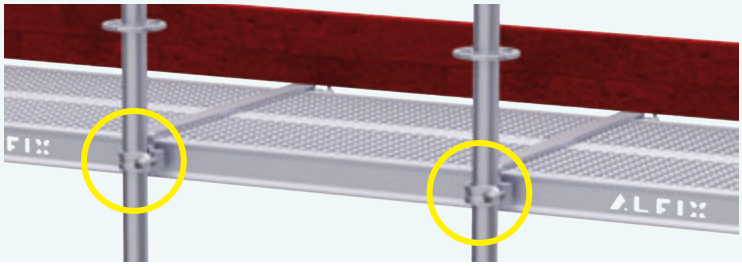

FIG.	DESCRIPTION		DIMENSIONS L/H×W [m]	WEIGHT approx. [kg]	ARTICLE NO.
01	**Intermediate deck bearer with tube fixture** steel; hot-dip galvanised — for decks with tube fixture	1a ledger to deck version one side with tube ledger suspension / one side with steel deck suspension	0.32	2.8	40 53 032
			0.64	3.9	40 53 064
			0.96	5.1	40 53 096
		1b deck to deck version both sides with steel deck suspension	0.32	3.1	40 51 032
			0.64	4.2	40 51 064
			0.96	5.4	40 51 096
02	**Intermediate deck bearer (UNIFIX fixture)** steel; hot-dip galvanised — for system decks	2a ledger to deck version one side with tube ledger suspension / one side with steel deck suspension	0.32	2.7	48 54 032
			0.64	4.1	48 54 064
			0.96	5.6	48 54 096
		2b deck to deck version ⊕ both sides with steel deck suspension	0.32	2.7	48 52 032
			0.64	4.1	48 52 064
			0.96	5.6	48 52 096
03	**Board bearer with tube fixture** ⊕ steel; hot-dip galvanised — both sides with tube ledger suspension — preferably for use with system-independent decks or to create openings in the work level when decks with tube fixtures are used — also suitable as side protection — permissible distributed line load must be observed		0.74	5.0	40 50 070
			1.00	8.1	40 50 100
			1.50	9.7	40 50 150
			2.00	10.2	40 50 200
			2.50	12.4	40 50 250
			3.00	14.9	40 50 300
04	**Board bearer (UNIFIX fixture)** ⊕ steel; hot-dip galvanised — both sides with tube ledger suspension — for creating openings in the scaffolding deck when using system decks		0.74	4.2	48 50 074
			1.10	7.3	48 50 110
05	**Recess bracket holder** ⊕ steel; hot-dip galvanised; wrench size 19 — with integrated halfcoupler — for all scaffolding systems up to bay widths 0.65 m and 1.00 m		0.70	2.3	14 51 060
			1.00	2.9	14 51 100
06	**Recess bracket starting piece** steel; hot-dip galvanised		0.35	1.7	14 40 000

APPLICATION EXAMPLE

2b INTERMEDIATE DECK LEDGER (UNIFIX FIXTURE) (deck to deck version) for steel decks

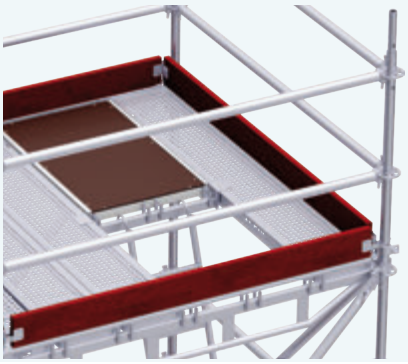

APPLICATION EXAMPLE

03 BOARD BEARER WITH TUBE FIXTURE allow the use of shorter decks within a long bay to create an access hatch

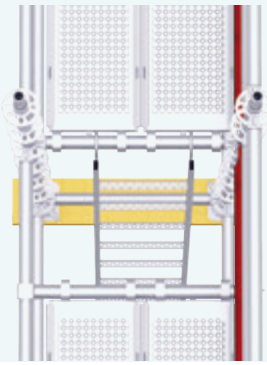

HORIZONTAL SUPPORT ELEMENTS / SIDE PROTECTION

01

02

03

04

APPLICATION EXAMPLE

01 **TOEBOARD** on steel deck with tube fixture

APPLICATION EXAMPLE

01 **TOEBOARD** on steel deck with tube fixture

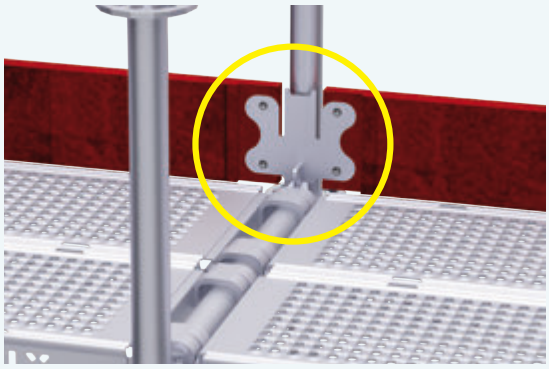

APPLICATION EXAMPLE

02 **TOEBOARD UNIFIX**

03 **TRANSVERSE TOEBOARD UNIFIX** and **LIFT-OFF PREVENTER**

(see pages 10/11)

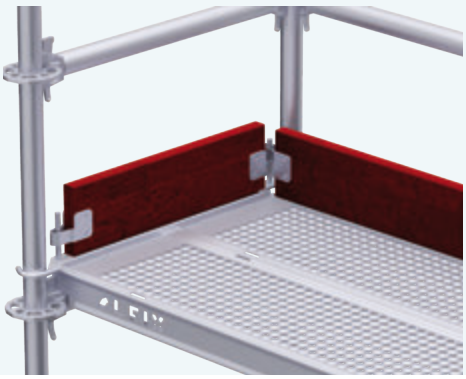

APPLICATION EXAMPLE

02 **TOEBOARD UNIFIX**

04 **TOEBOARD SUPPORT**

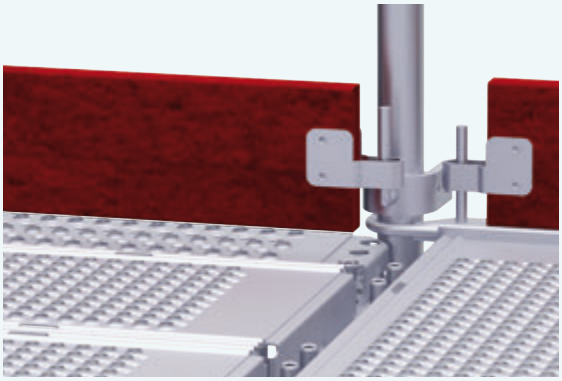

FIG.	DESCRIPTION	DIMENSIONS L/H×W [m]	WEIGHT approx. [kg]	ARTICLE NO.
01	**Toeboard, wood** ⊕ with claws; standard height 15 cm — weather-resistant — for use with decks with tube fixture — fixture of toeboards between standard and wedge head	0.74	1.6	48 95 075
		1.00	2.2	48 95 100
		1.10	2.2	48 95 110
		1.50	3.2	48 95 150
		2.00	4.1	48 95 200
		2.50	5.1	48 95 250
		3.00	6.0	48 95 300
		4.00	9.6	48 95 400
02	**Toeboard UNIFIX, wood** ⊕ with claws; standard height 15 cm — weather-resistant — for use with system decks — fitted by means of 04 toeboard support or lift-off preventer	0.74	1.8	22 50 070
		1.10	2.4	22 50 110
		1.50	4.0	22 50 150
		2.00	5.0	22 50 200
		2.50	6.5	22 50 250
		3.00	7.5	22 50 300
		4.00	10.0	22 50 400
03	**Transverse toeboard UNIFIX, wood** with claws; standard height 15 cm — fitted by means of 04 toeboard support or lift-off preventer — in conjunction with lift-off preventer (see pages 10/11) and system decks	0.74	1.4	48 51 074
		1.10	1.9	48 51 110
		1.50	2.7	48 51 150
		2.00	3.6	48 51 200
		2.50	4.5	48 51 250
		3.00	5.3	48 51 300
04	**Toeboard support** ⊕ steel; hot-dip galvanised		0.8	13 13 030

HORIZONTAL SUPPORT ELEMENTS / SIDE PROTECTION

1a

1b

02

APPLICATION EXAMPLE: FAÇADE SCAFFOLDING MODUL METRIC

- 02 Guard net system
- 03 Double end guardrail, steel
- a Tube ledger (see pages 10/11)
- b Toeboard, wood, UNIFIX façade scaffolding (see pages 14/15)
- c Diagonal brace (see pages 18/19)

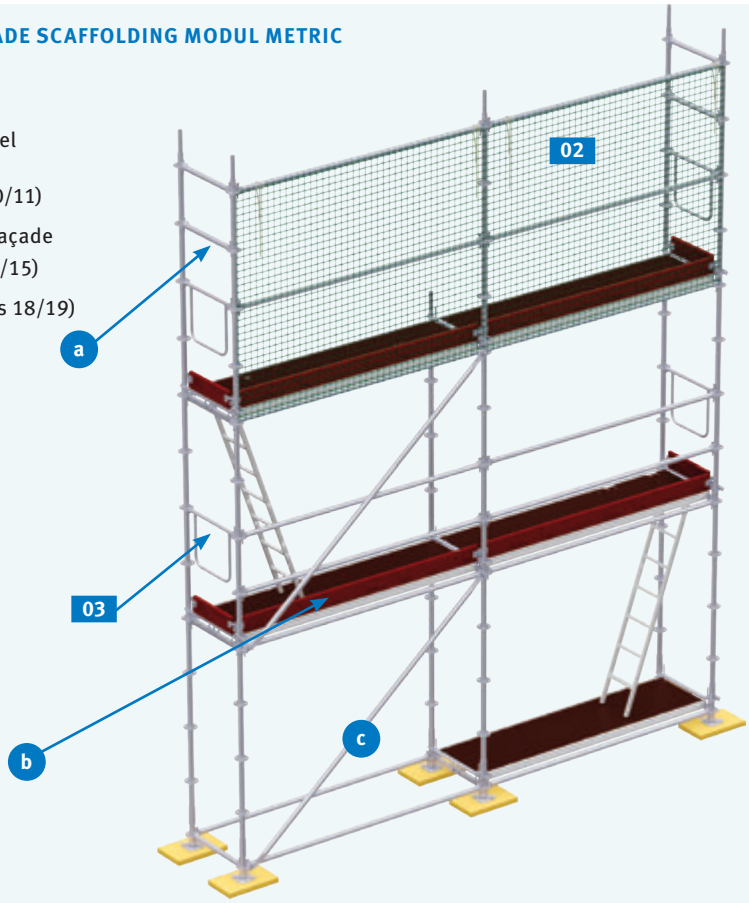

03

04

05

06

FIG.	DESCRIPTION	DIMENSIONS L/H×W [m]	WEIGHT approx. [kg]	ARTICLE NO.
01	**Advanced side protection** — assembled with guardrail post and telescopic guardrail — for a high level of safety during assembly / dismantling — for all compatible scaffolding systems — Please follow the Instructions for Assembly and Use and the provisions of the employer's liability insurance association for construction sites (BG Bau) to ensure proper use.			
1a	Advanced guardrail post steel; hot-dip galvanised	2.00	6.8	40 78 000
1b	Advanced telescopic guardrail aluminium and steel; hot-dip galvanised incl. linchpin with snap-on lock for transport security	2.50 – 3.07	7.9	14 43 200
02	**Guard net system** height 2.00 m; green; mesh size 100 mm — with tube ledger (at the top) and aluminium tube ø 40.5 mm (at the bottom) — tube connector for assembly in compliance with design parameters (bay by bay) — two fixing cords (left and right)	2.00 × 2.00	13.0	48 76 200
		2.50 × 2.00	14.0	48 76 250
		3.00 × 2.00	15.0	48 76 300
	For system-independent nets please see the ALFIX Accessories Catalogue			
03	**Double end guardrail, steel** steel tube ø 33.7 mm; hot-dip galvanised — for use as end side protection for façade scaffolding	0.74	3.6	48 62 074
		1.10	4.1	48 62 110
04	**Safety helmet with chin strap**	white (not shown)	0.4	37 50 018
		yellow	0.4	37 50 024
05	**Personal fall protection equipment kit (PPE)** EN 354 / 355 / 361 / 363; sharp-edge tested — with special carabiners to suit scaffolding use — delivered in a functional PVC bag — Revolution R2 Scaff harness 2.50 m, safety rope Manyard Edge — with Pivot Link™ attachment point at waist level to securely attach accessories, e.g. 06 ratchet spanner holster			37 67 009
06	**Ratchet spanner holster** with Pivot Link™ attachment point for secure attachment to the safety harness			37 50 017

APPLICATION EXAMPLE

01 ADVANCED GUARDRAIL POST

with convenient foot release mechanism

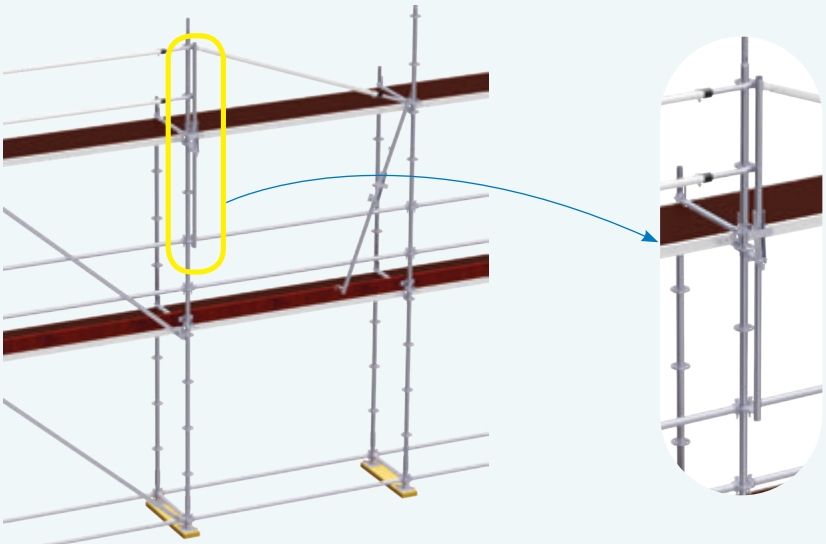

DIAGONAL BRACINGS

Vertical diagonal braces

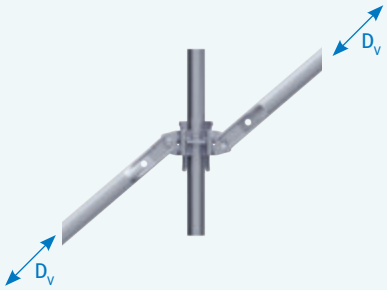

Different bay lengths

Colour code indication of bay length:

0.74 m	1.10 m	1.25 m	1.39 m
1.50 m	2.00 m	2.50 m	3.00 m

Bay height is indicated by the number of stripes (up to 4) on the component sticker:

2.00 m
1.50 m
1.00 m
0.50 m

01 VERTICAL DIAGONAL BRACE

32 different tube lengths available

Other tube lengths available upon request.

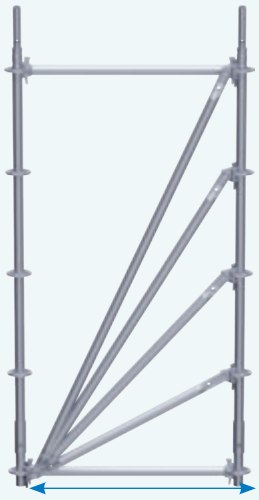

Bay height

2.00 m

1.50 m

1.00 m

0.50 m

Bay length

0.74 m; 1.10 m; 1.25 m; 1.39 m;
1.50 m; 2.00 m; 2.50 m; 3.00 m

Horizontal diagonal braces

serves to brace horizontal levels in scaffolding / birdcage scaffolding

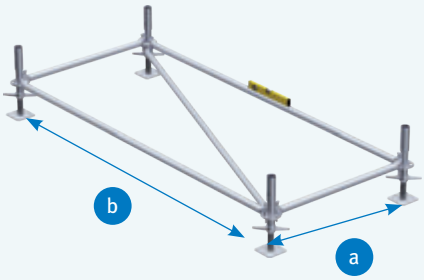

a 0.74 – 3.00 m

b 0.74 – 3.00 m

Stickers on tube ledgers for quick and easy indication of bay length and on diagonal braces for specifying bay length and installation height.

02

03

FIG.	DESCRIPTION		DIMENSIONS L/H×W [m]	WEIGHT approx. [kg]	ARTICLE NO.
01	**Vertical diagonal brace*** steel tube ø 48.3 × 2.7 mm; hot-dip galvanised — wedge lock connection ensures positive and non-positive connection — bolt-free assembly — serves to brace the basic scaffold	for bay height 2.00 m	0.74	7.7	48 21 200
			1.10	8.1	48 22 200
			1.39	8.6	48 23 200
			1.50	8.8	48 24 200
			2.00	9.8	48 25 200
			2.50	10.8	48 26 200
			3.00	12.0	48 27 200
		for bay height 1.50 m	1.50	7.8	48 24 150
			2.00	9.0	48 25 150
			2.50	10.2	48 26 150
			3.00	11.5	48 27 150
		for bay height 1.00 m	1.50	6.5	48 24 100
			2.00	8.1	48 25 100
			2.50	9.5	48 26 100
			3.00	10.9	48 27 100
		for bay height 0.50 m	1.50	6.1	48 24 050
			2.00	7.5	48 25 050
			2.50	8.8	48 26 050
			3.00	10.5	48 27 050
02	**Horizontal diagonal brace** steel tube ø 42.4 × 2 mm; hot-dip galvanised — Available for any possible combination of [bay length] x [bay width]! — pin suspension (bolt-free) — serves to brace horizontal levels in scaffolding without decks	for bay length 2.00 m	0.74	5.2	48 41 200
			1.10	5.8	48 42 200
		for bay length 2.50 m	0.74	6.8	48 41 250
			1.10	7.3	48 42 250
		for bay length 3.00 m	0.74	7.2	48 41 300
			1.10	8.4	48 42 300
03	**Horizontal diagonal ledger** steel tube ø 48.3 × 3.2 mm; hot-dip galvanised — wedge lock connection ensures positive and non-positive connection — bolt-free assembly — serves to brace horizontal levels in birdcage scaffolding		1.50 × 1.50	8.7	48 23 502
			2.00 × 2.00	9.7	48 23 503
			2.50 × 2.50	10.6	48 23 504
			3.00 × 3.00	12.0	48 23 505

* see page 39 for permissible loads

SCAFFOLDING DECKS / ACCESS DECKS

01

02

03

04

05

06

07

FIG.	DESCRIPTION	LOAD CLASS	DIMENSIONS L/H×W [m]	WEIGHT approx. [kg]	ARTICLE NO.
01	**Steel deck; 0.32 m wide** hot-dip galvanised; perforated — high load capacity — non-slip surface — with system fixture	6	0.74 × 0.32	5.3	22 21 074
		6	1.10 × 0.32	7.6	22 21 110
		6	1.50 × 0.32	11.1	22 21 150
		6	2.00 × 0.32	13.4	22 21 200
		5	2.50 × 0.32	16.8	22 21 250
		4	3.00 × 0.32	20.1	22 21 300
02	**Steel deck with tube fixture; 0.32 m wide** hot-dip galvanised; perforated — with integrated lift-off preventer — with tube suspension	6	0.74 × 0.32	7.1	48 20 074
		6	1.00 × 0.32	9.4	48 20 100
		6	1.10 × 0.32	10.1	48 20 110
		6	1.50 × 0.32	13.0	48 20 150
		6	2.00 × 0.32	16.8	48 20 200
		5	2.50 × 0.32	20.5	48 20 250
		4	3.00 × 0.32	24.3	48 20 300
03	**Wooden deck; 0.32 m wide** — impregnated — triple-layer bonded wood — construction height: 48 mm — secured by a system-compatible steel head piece at both ends	6	0.74 × 0.32	5.5	22 31 070
		6	1.10 × 0.32	8.5	22 31 110
		6	1.50 × 0.32	11.0	22 31 150
		5	2.00 × 0.32	14.3	22 31 200
		4	2.50 × 0.32	18.3	22 31 250
		3	3.00 × 0.32	22.6	22 31 300
04	**Frame platform; 0.64 m / 0.32 m wide** aluminium; film-coated plywood decking — extremely lightweight — with replaceable wood section insert / metal fixtures	3	1.50 × 0.64	11.4	22 02 150
		3	2.00 × 0.64	14.5	22 02 200
		3	2.50 × 0.64	17.9	22 02 250
		3	3.00 × 0.64	20.9	22 02 300
	(not shown)	3	4.00 × 0.32	18.7	22 01 400
05	**Frame platform with tube fixture; 0.60 m / 0.32 m wide** aluminium; film-coated plywood decking — extremely lightweight — with replaceable wood section insert / metal fixtures	3	1.50 × 0.60	12.7	48 03 150
		3	2.00 × 0.60	15.7	48 03 200
		3	2.50 × 0.60	19.1	48 03 250
		3	3.00 × 0.60	22.2	48 03 300
	(not shown)	3	4.00 × 0.32	20.5	48 03 400
06	**Solid aluminium deck; 0.32 m wide** — completely made of aluminium, profile height: 48 mm — hollow chamber profiles with anti-slip longitudinal grooves — stacking bulge, easily stackable — stacking bulge faces downwards which prevents water or ice deposits	6	1.10 × 0.32	4.7	22 11 110
		6	1.50 × 0.32	6.1	22 11 150
		6	2.00 × 0.32	8.0	22 11 200
		5	2.50 × 0.32	9.9	22 11 250
		4	3.00 × 0.32	11.9	22 11 300
		2	4.00 × 0.32	15.7	22 11 400
07	**Lightweight deck; 0.64 m wide** — extremely lightweight, non-slip surface, easily stackable — profile height approx. 50 mm — combination of hollow chamber profiles and aluminium treadplate — with grip recess (plastic) at both ends	4	1.50 × 0.64	11.8	22 13 150
		4	2.00 × 0.64	15.5	22 13 200
		4	2.50 × 0.64	18.7	22 13 250
		3	3.00 × 0.64	22.3	22 13 300

Delivery time on request

SCAFFOLDING DECKS / ACCESS DECKS

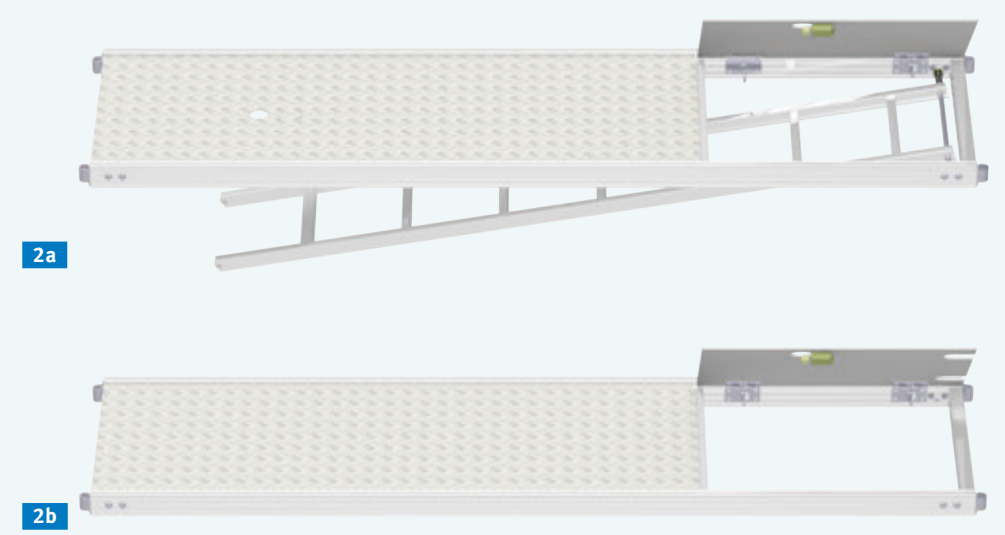

ACCESS DECKS AND PLATFORMS

Platforms without hatch access have 1 borehole at the front end, access decks have 2 boreholes (ø 16 mm). This helps easily distinguish between the different platform types when they are stacked. The borehole can also be used to attach hooks for vertical transport.

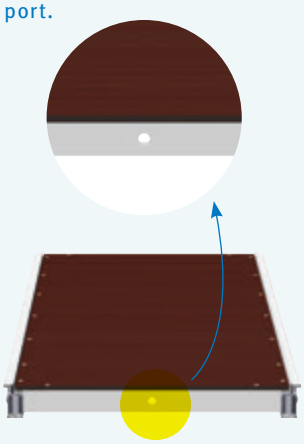

Platform

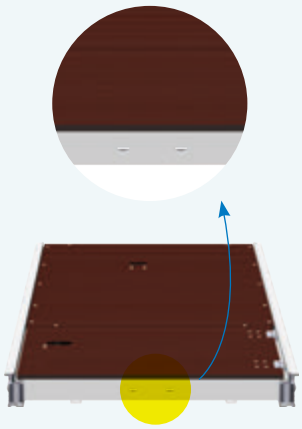

Access deck

NOTE

We recommend the use of stairway ascents in particular when the height of the access exceeds 10 m, material is to be transported via this access or a considerable amount of work is done (see pages 34/35).

Source: BGI / GUV-I 663

LOAD CLASS	UNIFORMLY DISTRIBUTED LOAD Q [kN/m²]
1	0.75
2	1.50
3	2.00
4	3.00
5	4.50
6	6.00

FIG.	DESCRIPTION	LOAD CLASS	DIMENSIONS L/H×W [m]	WEIGHT approx. [kg]	ARTICLE NO.
01	**Access deck; 0.64 m** aluminium; film-coated plywood decking — with replaceable wood section insert / metal fixtures — convenient and fail-safe ladder and hatch latching				
	1a Version with ladder	3	2.50 × 0.64	24.0	22 04 250
	— with system fixture	3	3.00 × 0.64	27.0	22 04 300
	1b Version with ladder	3	2.50 × 0.64	24.0	22 09 250
	— with system fixture — hatch offset, with tread	3	3.00 × 0.64	30.0	22 09 300
	1c Version without ladder	3	1.50 × 0.64	14.9	22 05 150
	— with system fixture	3	2.00 × 0.64	17.0	22 05 200
	— with fitting for storey ladders (see pages 34/35)	3	2.50 × 0.64	23.0	22 05 250
		3	3.00 × 0.64	26.0	22 05 300
02	**Access deck; 0.64 m** ⊕ aluminium; chequer plate decking — extremely durable and weather-resistant — with replaceable decking / metal fixtures — completely made of aluminium, for use in areas with special requirements, e.g. for industrial scaffoldings (fire protection)				
	2a Version with ladder	3	2.50 × 0.64	28.0	22 07 250
	— with system fixture	3	3.00 × 0.64	31.9	22 07 300
	2b Version without ladder	3	1.50 × 0.64	16.0	22 08 150
	— with fitting for storey ladders (see pages 34/35)	3	2.00 × 0.64	20.0	22 08 200
		3	2.50 × 0.64	24.0	22 08 250
		3	3.00 × 0.64	27.5	22 08 300

APPLICATION EXAMPLE

Access deck with **ladder (chequer plate decking)**

The hatch and ladder latches facilitate an easy release, from both the upper and the lower scaffolding levels, and ensure a safe securing of the access hatch and storey ladder. The patented scissor hinge ensures the access hatch functions reliably.
For greater protection against sliding during transportation or secure assembly, the ladder suspension hardware is additionally equipped with a spacer sleeve on both sides, intended to prevent fingers from being pinched.

SCAFFOLDING DECKS / ACCESS DECKS

APPLICATION EXAMPLE

05 STEEL PLANK

with locking pin and spring clip

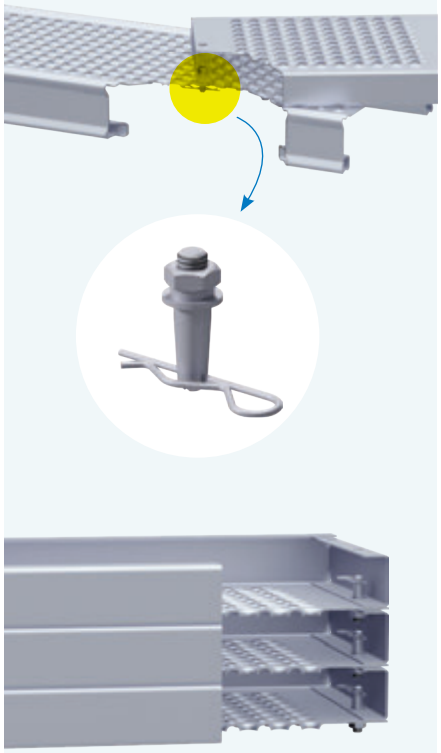

easily stackable

06

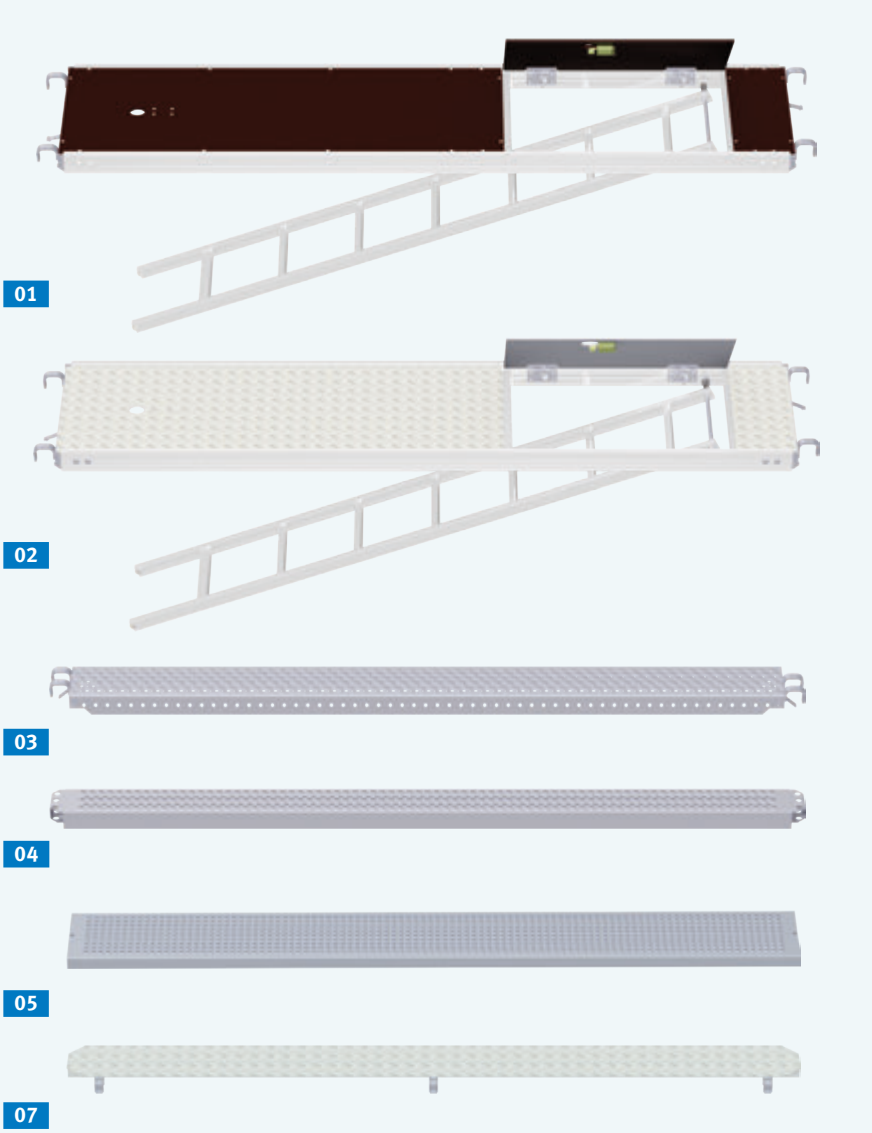

APPLICATION EXAMPLE

07 GAP COVER FOR SYSTEM DECKS

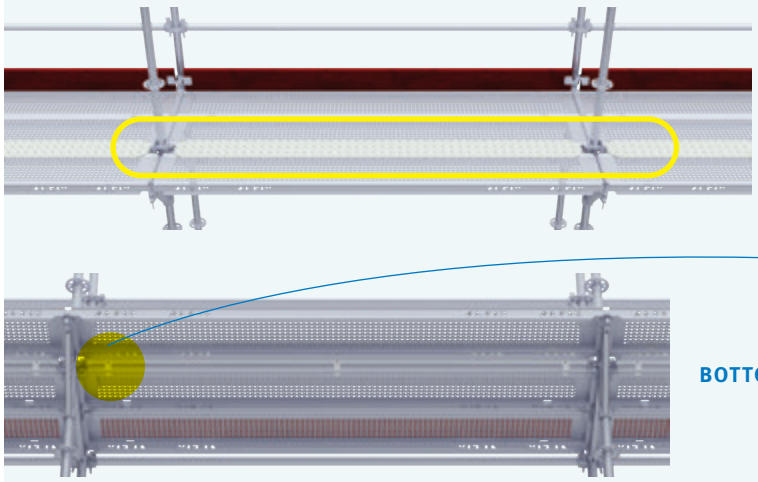

BOTTOM SIDE

DETAIL

07 GAP COVER

TUBE CLAMP ATTACHED TO TUBE LEDGER

FIG.	DESCRIPTION	LOAD CLASS	DIMENSIONS L/H×W [m]	WEIGHT approx. [kg]	ARTICLE NO.
01	**Access deck with tube fixture and integrated ladder** aluminium; film-coated plywood decking — with tube fixture and lift-off preventer — hatch offset, with tread	3	2.50 × 0.60	26.0	48 00 251
		3	3.00 × 0.60	30.0	48 00 301
02	**Access deck with tube fixture and integrated ladder** aluminium; chequer plate decking — with tube fixture and lift-off preventer — hatch offset, with tread — extremely durable and weather-resistant — completely made of aluminium, for use in areas with special requirements, e.g. for industrial scaffoldings (fire protection)	3	2.50 × 0.60	29.0	48 00 250
		3	3.00 × 0.60	33.0	48 00 300
03	**Intermediate deck with tube fixture, steel** hot-dip galvanised — as spacing deck in case of different bay widths — mainly used in birdcage scaffolding	6	0.74 × 0.19	5.5	48 30 074
		6	1.10 × 0.19	7.3	48 30 110
		6	1.50 × 0.19	9.8	48 30 150
		6	2.00 × 0.19	12.7	48 30 200
		5	2.50 × 0.19	15.6	48 30 250
		4	3.00 × 0.19	18.5	48 30 300
		3	4.00 × 0.19	24.2	48 30 400
04	**Intermediate deck, steel** hot-dip galvanised — as spacing deck in case of different bay widths — mainly used in birdcage scaffolding	6	0.74 × 0.14	4.6	22 25 074
		6	1.10 × 0.14	6.4	22 25 110
		6	1.50 × 0.14	8.8	22 25 150
		6	2.00 × 0.14	11.6	22 25 200
		5	2.50 × 0.14	14.3	22 25 250
		4	3.00 × 0.14	17.1	22 25 300
		3	4.00 × 0.14	19.1	22 25 400
05	**Steel plank** ⊕ with locking pin and spring clip — for covering and/or closing corner areas and other construction-related openings — only for use on steel decks — The support length must be at least 250 mm! — height: 45 mm	4	1.00 × 0.30	5.5	12 24 100
		4	1.50 × 0.30	8.0	12 24 150
		3	2.00 × 0.30	10.5	12 24 200
		3	2.50 × 0.30	12.8	12 24 250
06	**Spring clip** spare part for pos. 05			0.03	73 04 006
07	**Gap cover** ⊕ aluminium chequer plate — for covering gaps between deck levels when using system decks — for covering construction-related gaps — fitted onto the tube ledger When using decks with tube fixtures a gap cover is required and must be ordered as needed!		1.10 × 0.19	2.5	48 32 110
			1.50 × 0.19	3.7	48 32 150
			2.00 × 0.19	5.1	48 32 200
			2.50 × 0.19	6.5	48 32 250
			3.00 × 0.19	7.8	48 32 300

BRACKETS

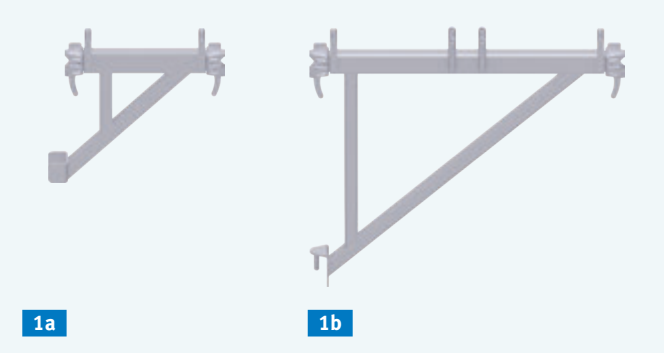

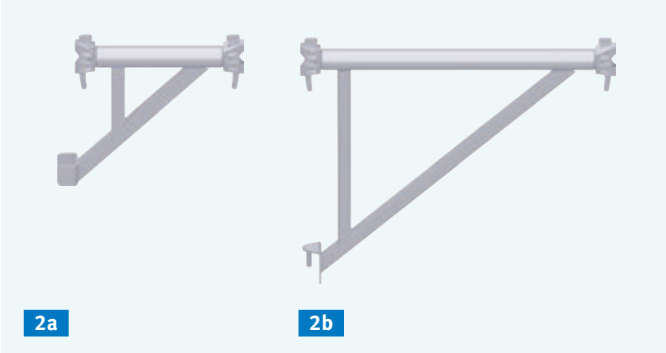

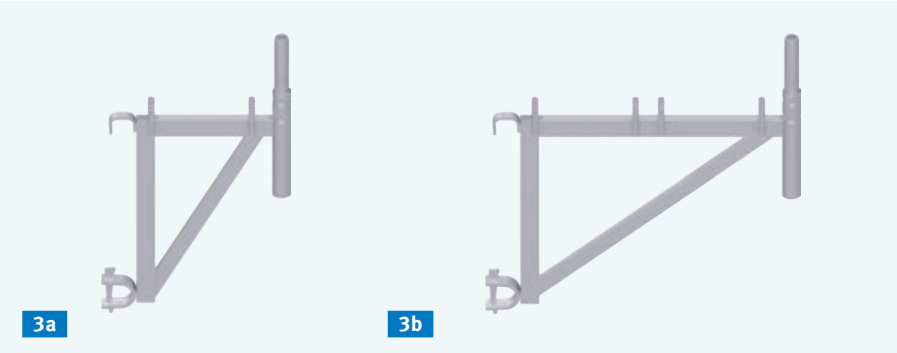

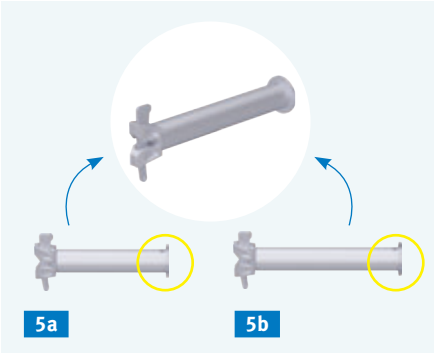

APPLICATION EXAMPLE

03 BRACKET WITH TUBE SUSPENSION

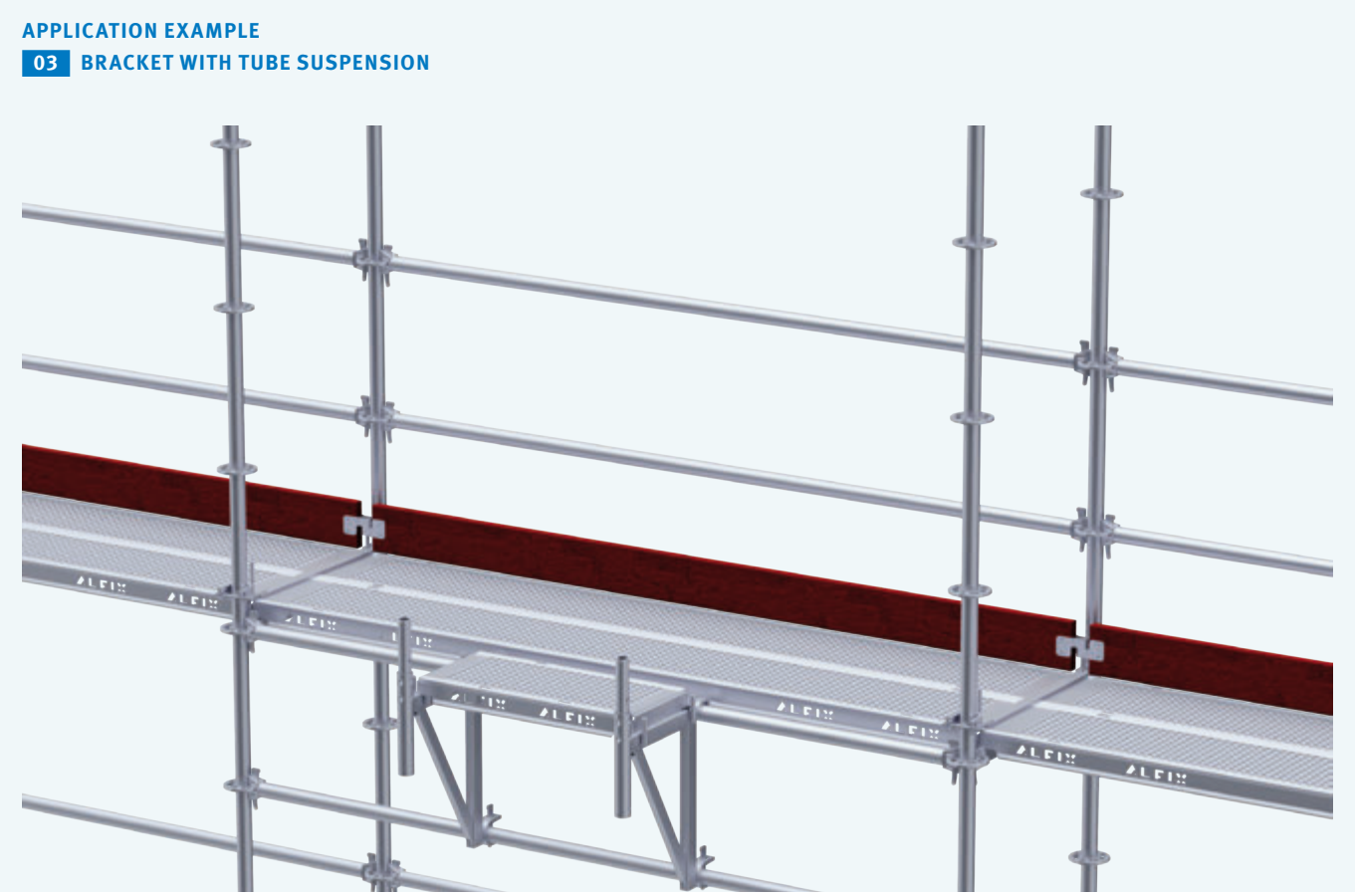

FIG.	DESCRIPTION		DIMENSIONS L/H×W [m]	WEIGHT approx. [kg]	ARTICLE NO.
01	**Bracket** steel; hot-dip galvanised — with UNIFIX fixture — for widening scaffolding bays / converting projecting building parts — see pages 10/11 for respective lift-off preventer	1a	0.41	3.4	48 10 001
		1b	0.74	6.2	48 10 002
02	**Bracket** steel; hot-dip galvanised — with tube fixture — for bracket widening when decks with tube fixture are used	2a	0.41	3.7	48 10 011
		2b	0.74	6.3	48 10 012
03	**Bracket with tube suspension** ⊕ steel; hot-dip galvanised — with UNIFIX fixture — for scaffolding in recesses of buildings at deck level or at intermediate heights	3a	0.41	6.9	48 10 020
		3b	0.74	8.8	48 10 021
04	**Modul bracket brace** ⊕ steel; hot-dip galvanised — for bracket support (Modul bracket 0.74 m) — fitted in the rosette on the standard		2.05	7.5	40 10 205
05	**Support ledger** steel tube ø 48.3 × 3.2 mm; hot-dip galvanised — support element for decks with tube suspension for inwards widening of decks	5a	0.29	1.4	48 29 000
		5b	0.36	1.7	48 29 001

APPLICATION EXAMPLE
04 MODUL BRACKET BRACE
for creating projections as an alternative to brackets

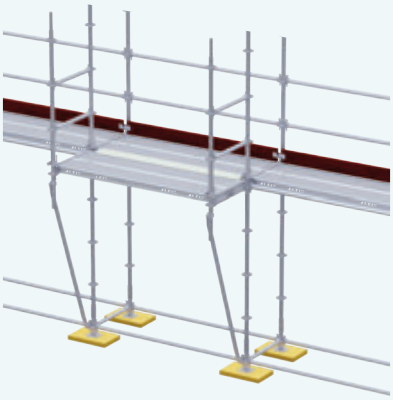

APPLICATION EXAMPLE
3a BRACKET WITH TUBE SUSPENSION
to assemble working platforms in window recesses

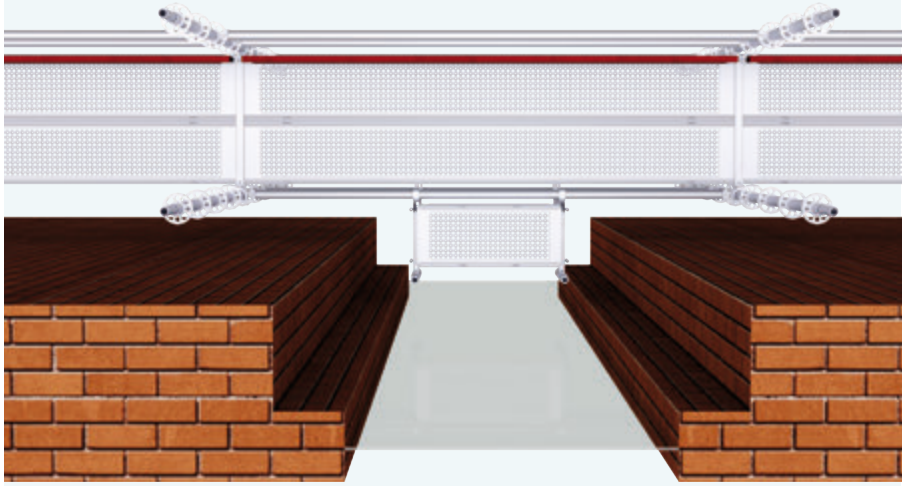

LATTICE GIRDERS

APPLICATION EXAMPLE
4c TUBE CONNECTOR FOR LATTICE GIRDER (PEDESTRIAN PASSAGE)

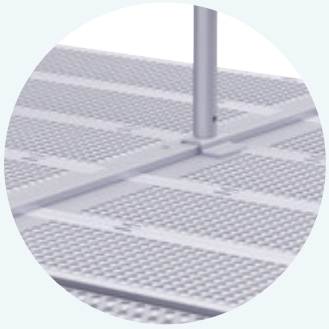

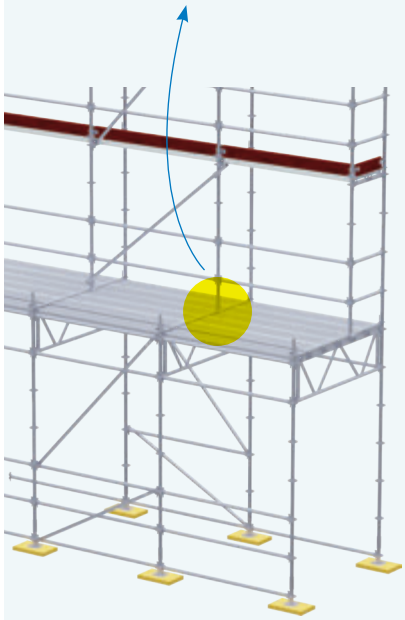

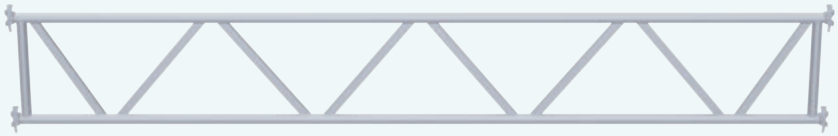

1a

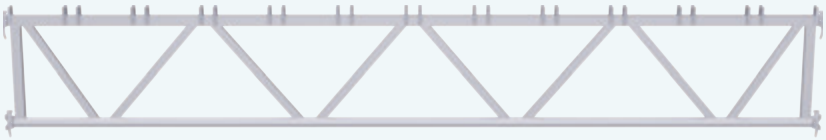

1b

2a

2b

03

4a

4c

APPLICATION EXAMPLE 1a LATTICE GIRDER and 02 MODUL LATTICE GIRDER CROSS BRACE

The lattice girders have a movable lattice girder cross brace for fitting decks. This provides for a high level of safety as the decks can be fitted by sliding them onto the lattice girders while standing on the part of the scaffolding that has already been assembled.

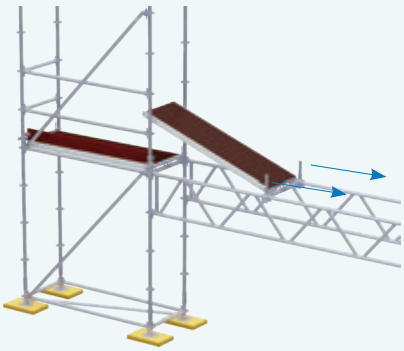

APPLICATION EXAMPLE 05 MODUL GUARDRAIL STANDARD WITH TUBE FIXTURE

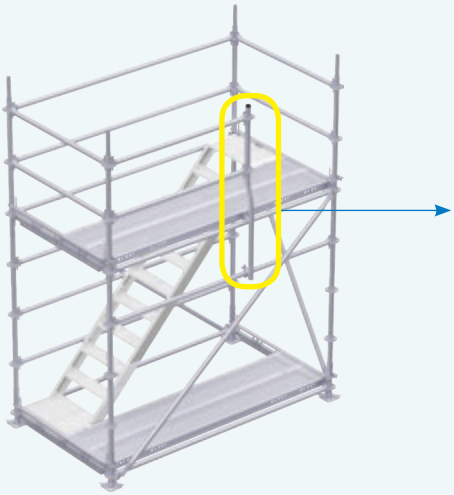

FIG.	DESCRIPTION	DIMENSIONS L/H×W [m]	WEIGHT approx. [kg]	ARTICLE NO.
01	**Lattice girder*** ⊕ steel; hot-dip galvanised — used for bridging or to construct areal scaffolding — for direct connection to the rosette with 4 wedge heads — lattice girder with welded-on tube connector available upon request			
	1a Lattice girder (tube fixture) — for decks with tube fixture — top and bottom chord: steel tube 48.3 mm	2.00	23.4	48 70 200
		2.50	29.7	48 70 250
		3.00	33.0	48 70 300
		4.00	45.1	48 70 400
		5.00	55.7	48 70 500
		6.00	66.4	48 70 600
		7.00	77.0	48 70 700
		8.00	88.4	48 70 800
	1b Lattice girder (UNIFIX fixture) — top chord for suspending system decks — bottom chord: steel tube 48.3 mm	2.00	23.8	48 71 200
		2.50	29.8	48 71 250
		3.00	34.2	48 71 300
		4.00	44.7	48 71 400
		4.50	50.2	48 71 450
		5.00	55.3	48 71 500
		6.00	66.1	48 71 600
		7.50	88.2	48 71 750
02	**Lattice girder cross brace** ⊕ steel; hot-dip galvanised — for use in conjunction with 1a lattice girders with top chord — lift-off prevention by means of safety bolts — see pages 10/11 for respective lift-off preventer — flexible alternative to lattice girders with welded-on tube connectors	2a 2-deck	0.74	7.9	48 73 074
		2b 3-deck	1.10	9.4	48 73 110
03	**Tube connector (tube fixture)** steel; hot-dip galvanised; incl. linchpin — for fitting onto tubes — lift-off prevention with safety bolt	0.4	2.1	41 51 002
04	**Tube connector for lattice girder** steel; hot-dip galvanised — for use on tube ledgers or lattice girders with top chord for variable arrangement of standards			
	4a with coupler (wrench size 22)	0.3	1.6	48 51 001
	4b with bended profile coupler (not shown)	0.3	1.5	41 51 007
	4c for pedestrian passage ⊕	0.2	1.3	48 51 010
05	**Guardrail standard (with tube fixture)** ⊕ — for attaching tube ledgers as side protection whilst simultaneously allowing for a passage	1.65	8.1	41 36 165

* Installation of lattice girders according to approval Z-8.22-932. The stability of the scaffolding must be verified in each case when lattice girders are used (see for permissible loads).

STAIRWAYS / LADDERS / GUARDRAILS

APPLICATION EXAMPLE
CONSTRUCTION SITE
STAIRWAY TOWER 200 KG

- 10-standard stairway tower with stairway stringers for receiving system decks (e.g. steel decks)
- 9-step, riser 22 cm / 10 decks per standard stairway
- stair width: max. 1.10 m
- load-bearing capacity max. 2.0 kN/m²

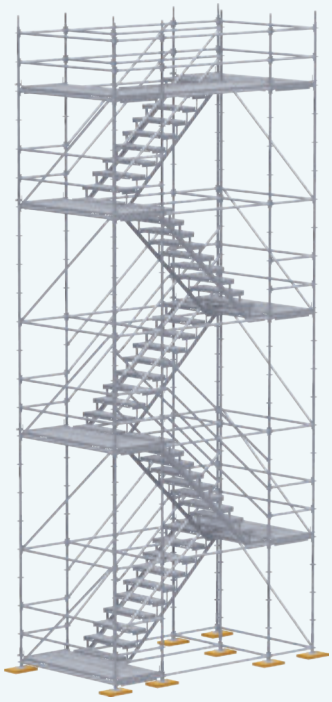

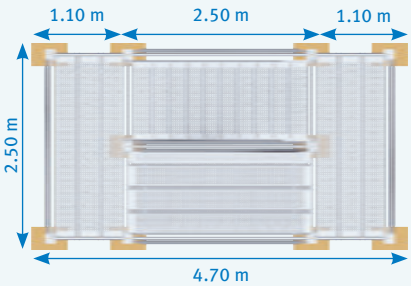

APPLICATION EXAMPLE
ESCAPE STAIRWAY TOWER 500 KG

- 16-standard stairway tower with stairway stringers for receiving system decks (e.g. steel decks)
- different stair widths, for different applications
- 9-step, riser 22 cm / 9 decks per standard stairway
- load-bearing capacity max. 5.0 kN/m²

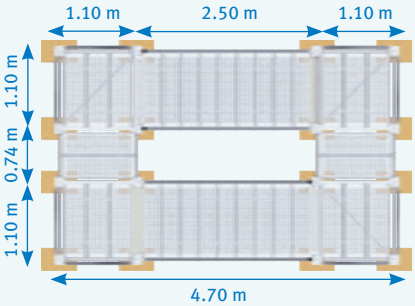

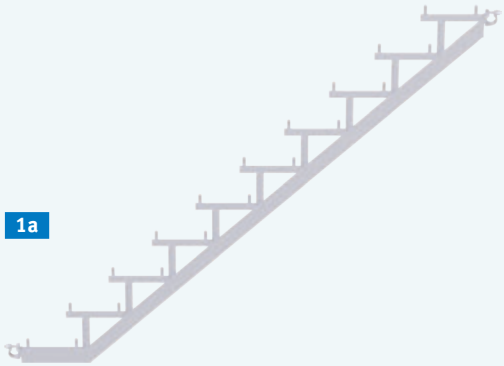

1a

1b

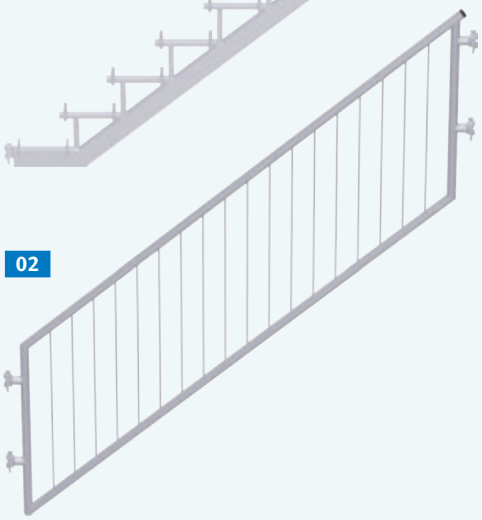

02

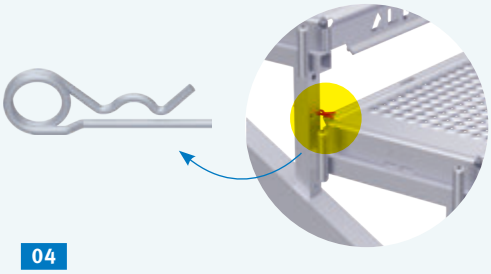

04

03

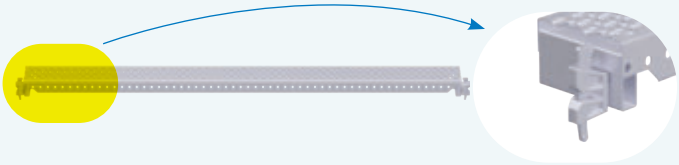

05

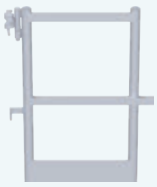

06

FIG.	DESCRIPTION		DIMENSIONS L/H×W [m]	WEIGHT approx. [kg]	ARTICLE NO.
01	**Modul stairway stringer** steel; hot-dip galvanised — with UNIFIX fixture for system decks	1a with halfcoupler permissible load: 200 kg/m² (load class 3)	1.50 × 1.00	17.9	48 10 054L
			1.50 × 1.00	17.9	48 10 054R
			2.50 × 2.00	29.6	48 10 060L
			2.50 × 2.00	29.6	48 10 060R
		1b with wedge-heads permissible load: 500 kg/m² (load class 5)	1.50 × 1.00	19.3	48 10 053
			2.50 × 2.00	33.5	48 10 061
02	**Stair guardrail, with child protection** steel; hot-dip galvanised — for installation in a stairway tower up to 500 kg/m², with vertical rods — further dimensions available upon request — for use in escape stairway towers or similar building projects in public areas		1.50 × 1.00	27.4	48 36 102
			2.50 × 2.00	42.0	48 36 202
03	**Guardrail, with child protection** steel; hot-dip galvanised — for use in stairway towers 500 kg/m² or 750 kg/m² — with vertical rods — for use in escape stairway towers or similar building projects in public areas		0.74 × 1.10	15.3	48 38 074
			1.10 × 1.10	18.9	48 38 110
			1.50 × 1.10	24.4	48 38 150
			2.00 × 1.10	30.4	48 38 200
			2.50 × 1.10	36.3	48 38 250
			3.00 × 1.10	42.3	48 38 300
04	**Spring clip** ⊕ steel; galvanised; 4 × 78 mm — lift-off prevention for stairway stringer				73 04 004
05	**Ledger with gap cover; 0.16 m, off-centre installation** ⊕ steel; hot-dip galvanised — to be used when using the stair stringer of 500 kg/m² at the upper transition platform — provides for a uniform rise/going ratio in accordance with the regulations — wedge-head is attached off-centre		0.74 × 0.16	5.9	48 20 079
			1.10 × 0.16	8.0	48 20 119
			1.50 × 0.16	10.7	48 20 159
			2.00 × 0.16	13.5	48 20 209
			2.50 × 0.16	16.1	48 20 259
06	**Swing door** ⊕ steel; hot-dip galvanised — with locking mechanism (self-locking) — for securing accesses, e.g. in stairway towers		0.70	12.7	40 77 073
			1.00	14.5	40 77 109

APPLICATION EXAMPLE: 16-STANDARD STAIRWAY TOWER

with first platform at the height of 1 m

05 Ledger with gap cover

06 Swing door

a Gap cover

see pages 24/25

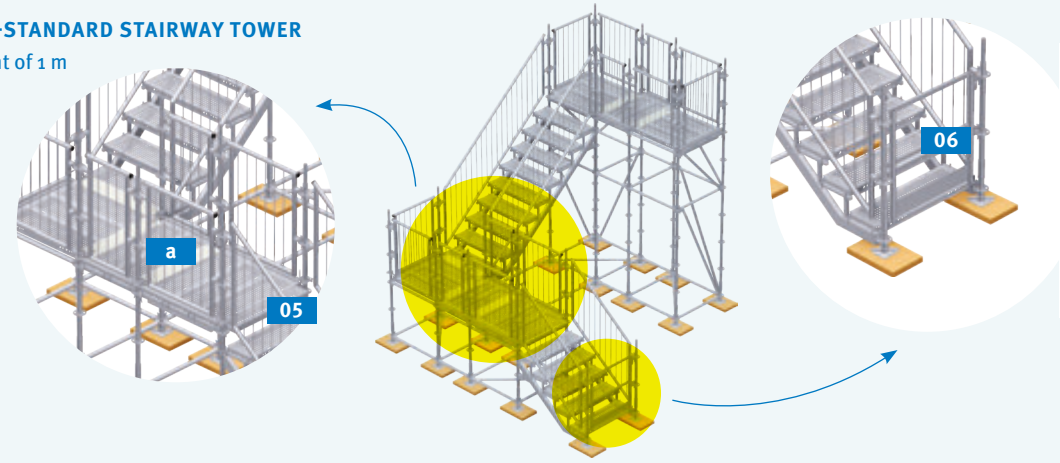

STAIRWAYS / LADDERS / GUARDRAILS

APPLICATION EXAMPLE
ESCAPE STAIRWAY TOWER 750 KG

- 16-standard stairway tower with stairway stringers for fixing system decks (e.g. steel decks)
- 9-step, riser 17 cm / 8 decks per standard stairway
- permissible load: 7.5 kN/m²

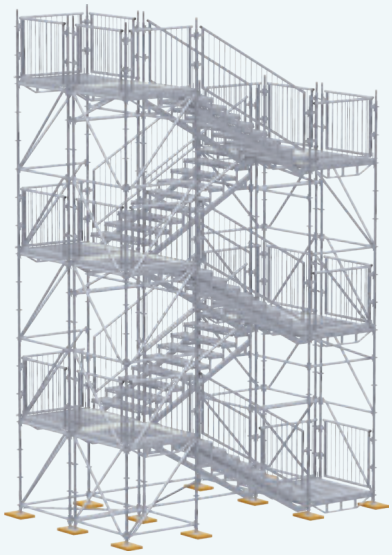

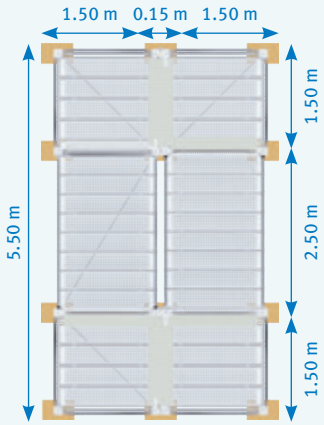

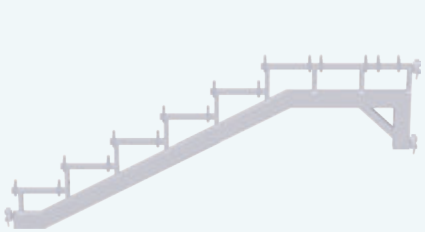

1a

1b

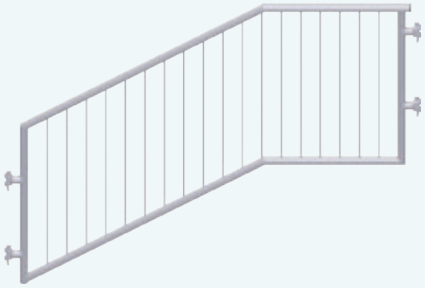

2a

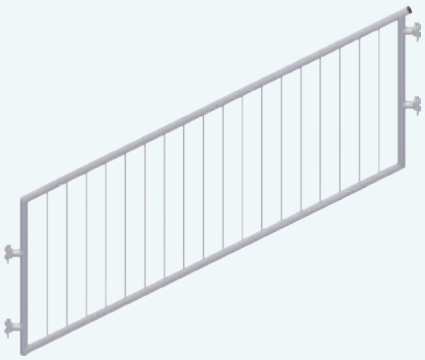

2b

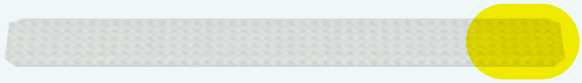

03

04

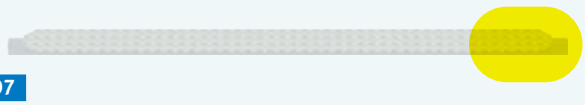

07

05

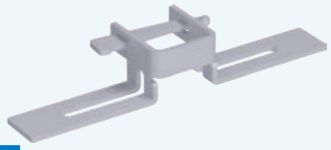

06

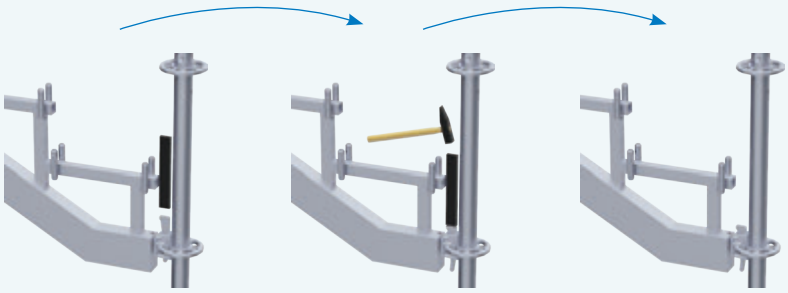

ASSEMBLY NOTICE FOR THE STAIRWAY STRINGER 750 kg

To drive the wedge into the rosette through the respective opening (10 x 35 mm) in the stairway stringer, we advise the use of a suitable drive-in pin which can be delivered upon request.

FIG.	DESCRIPTION		DIMENSIONS L/H×W [m]	WEIGHT approx. [kg]	ARTICLE NO.
01	**Stairway stringer** ⊕ steel; hot-dip galvanised — with UNIFIX fixture for system decks — with wedge-head connection, for loads of max. 750 kg/m²	1a	2.50 × 1.00	31.8	48 10 068
		1b	2.50 × 1.50	31.9	48 10 059
02	**Stair guardrail, with child protection** steel; hot-dip galvanised — for installation in a stairway tower up to 750 kg/m² — with vertical rods — further dimensions available upon request — for use in escape stairway towers or similar building projects in public areas	2a	2.50 × 1.00	40.1	48 36 162
		2b	2.50 × 1.50	41.6	48 36 182
03	**Gap cover for double standard** ⊕ aluminium chequer plate — lift-off prevention with clamp coupler (universal design) when using double standard — as an alternative to a lift-off preventer — for covering gaps between deck levels		1.10 × 0.40	5.6	48 33 110
			1.50 × 0.40	8.5	48 33 150
			2.00 × 0.40	11.5	48 33 200
04	**Ledger with gap cover; 0.12 m, off-centre installation** steel; hot-dip galvanised — to be used when using the stair stringer of 750 kg/m² (2.50 × 1.50 m) at the upper and lower transitions to the platform — to be used when using the stair stringer of 750 kg/m² (1.50 × 1.00 m) at the lower transition platform — provides for a uniform rise/going ratio in accordance with the regulations — wedge-head is attached off-centre		1.10 × 0.12	4.9	48 20 115
			1.50 × 0.12	6.7	48 20 155
			2.00 × 0.12	10.4	48 20 203
05	**Clamp coupler, universal design** ⊕ steel; hot-dip galvanised; wrench size 19	WS 19	0.20	1.1	13 17 019
06	**Double clamp coupler with wedge** steel; galvanised — to secure both sides of the gap cover — wedge lock connection to ensure positive and non-positive connections			1.2	13 17 030
07	**Gap cover** aluminium chequer plate — reinforced aluminium box profile 55 × 55 mm — for covering gaps between deck levels, when using deck bearers and double ledgers with UNIFIX suspension		1.10 × 0.19	2.8	48 35 107
			1.50 × 0.19	4.1	48 35 151
			2.00 × 0.19	5.5	48 35 201
			2.50 × 0.19	6.9	48 35 251

APPLICATION EXAMPLE 01 STAIRWAY STRINGER

with starting height 1 m (adjusted to the ground with system decks and starter transom)

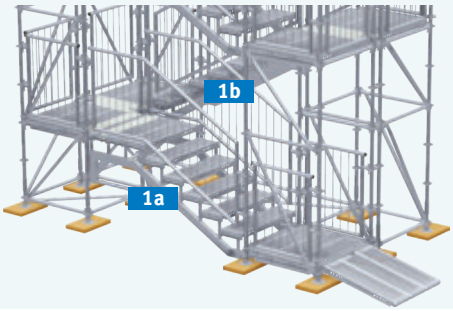

APPLICATION EXAMPLE

03 Gap cover for double standard

05 Clamp coupler (universal design) as lift-off prevention

07 Gap cover with system fixture

STAIRWAYS / LADDERS / GUARDRAILS

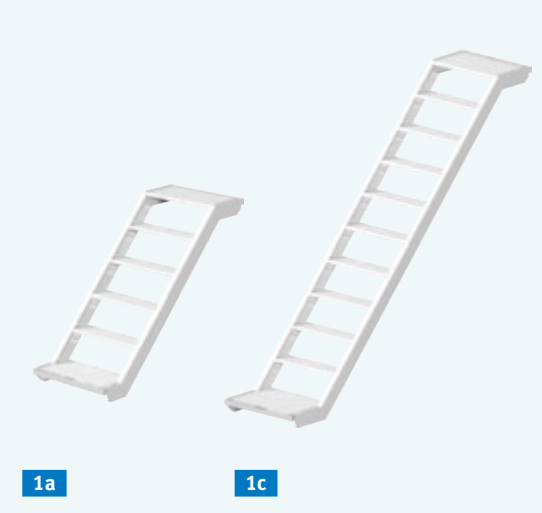

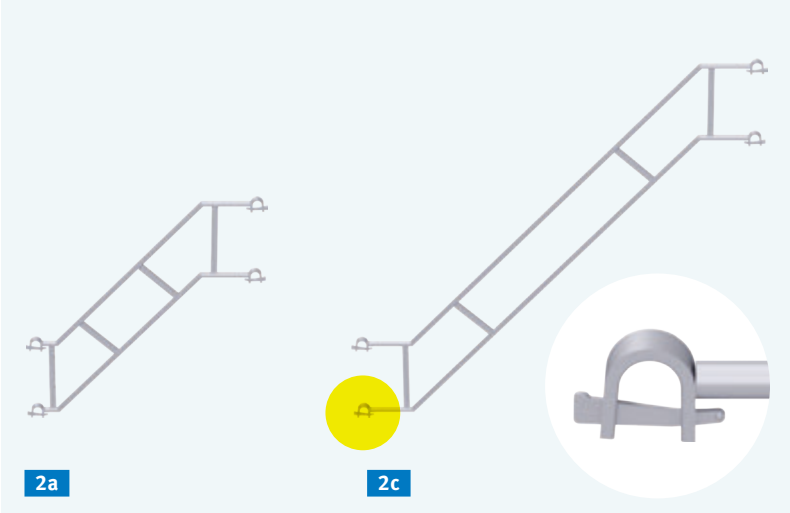

APPLICATION EXAMPLE: STAIRWAY TOWER ZIGZAG STAIR ARRANGEMENT OF: 01 UNIFIX STAIRWAY, 02 DOUBLE STAIR GUARDRAIL, 07 INTERNAL GUARDRAIL, 08 STAIR STRINGER FALL PROTECTION

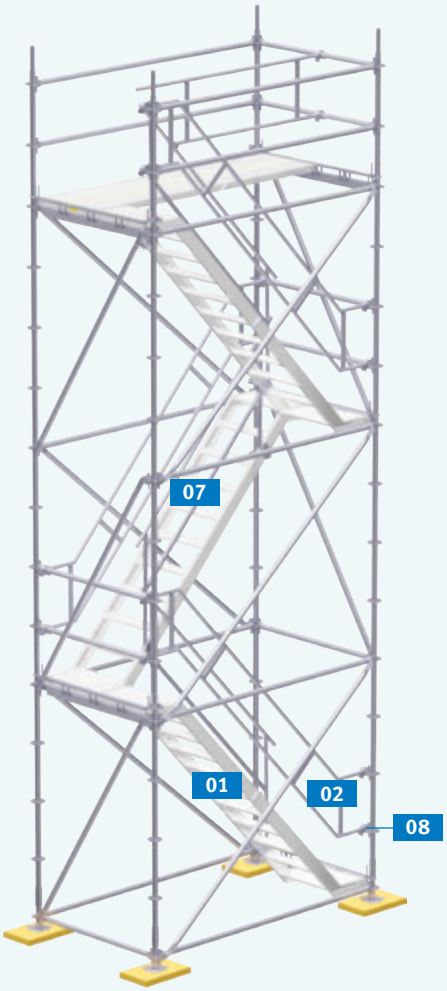

An internal guardrail is mandatory for this assembly version.

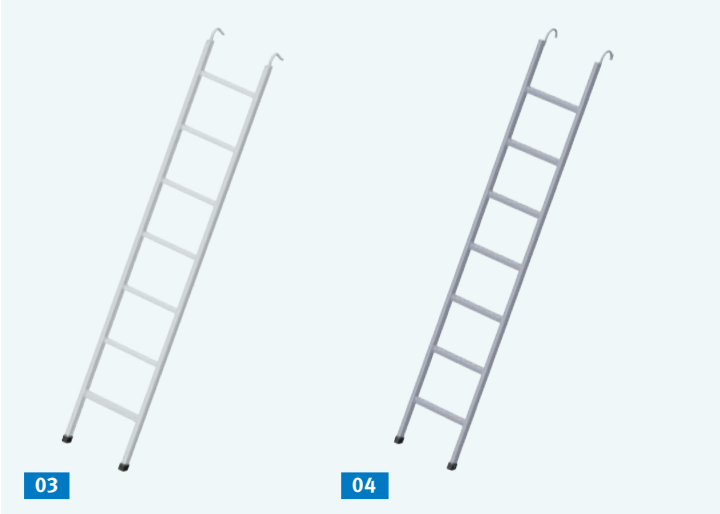

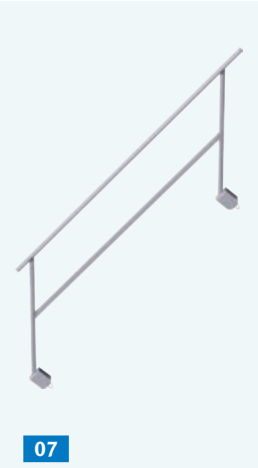

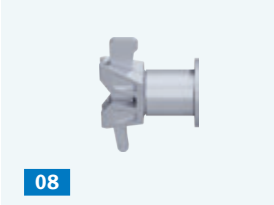

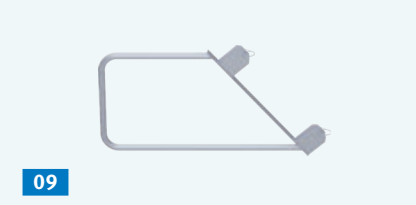

FIG.	DESCRIPTION		DIMENSIONS L/H×W [m]	WEIGHT approx. [kg]	ARTICLE NO.
01	**Stairway, aluminium, width: 0.64 m** ⊕ with system fixture — riser 20 cm; for use with platform stairway tower — load-bearing capacity max. 2 kN/m² (load class 3)	1a	1.39 × 1.00	16.8	22 98 140
		1b (not shown)	2.00 × 1.50	23.5	22 98 200
		1c	2.50 × 2.00	27.6	22 98 250
		1d (not shown)	3.00 × 2.00	31.0	22 98 300
02	**Double stair guardrail** ⊕ steel; hot-dip galvanised — with bended profile coupler for attachment to tube ledgers or guardrail fixing devices	2a	1.39 × 1.00	12.3	48 36 209
		2b (not shown)	2.00 × 1.50	15.5	48 36 210
		2c	2.50 × 2.00	18.0	48 36 206
		2d (not shown)	3.00 × 2.00	19.9	48 36 207
03	**Storey ladder, aluminium** for 2.00 m storey height		2.00 × 0.40	3.7	11 32 001
04	**Storey ladder, steel** hot-dip galvanised; for 2.00 m storey height		2.00 × 0.40	8.1	11 42 000
05	**Storey ladder segment** ⊕ steel; hot-dip galvanised — can be used as a ladder when assembled to standards		0.74 x 0.50	5.2	48 11 001
06	**Platform guardrail, steel** steel; hot-dip galvanised		2.50	8.7	48 29 250
			3.00	9.4	48 29 300
07	**Internal guardrail for aluminium stairway, height: 2.00 m** ⊕ steel tube ø 33.7 mm; hot-dip galvanised		2.50 / 3.00	13.3	11 31 000
08	**Guardrail fixing device** ⊕ steel; hot-dip galvanised			0.80	41 36 300
09	**Stair stringer fall protection** ⊕ steel; hot-dip galvanised — incl. linchpin 12 × 70 mm with snap-on lock — effective fall protection when using aluminium stairways		1.00 × 0.50	8.8	11 31 001

APPLICATION EXAMPLE

- 02 DOUBLE STAIR GUARDRAIL
- 06 PLATFORM GUARDRAIL, STEEL
- 08 GUARDRAIL FIXING DEVICE
- 09 STAIR STRINGER FALL PROTECTION

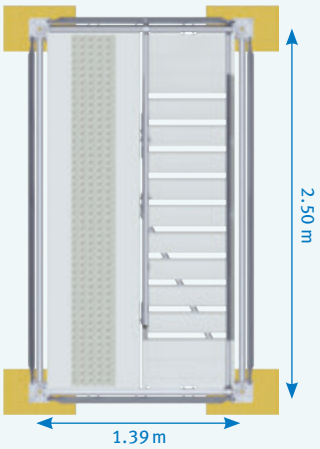

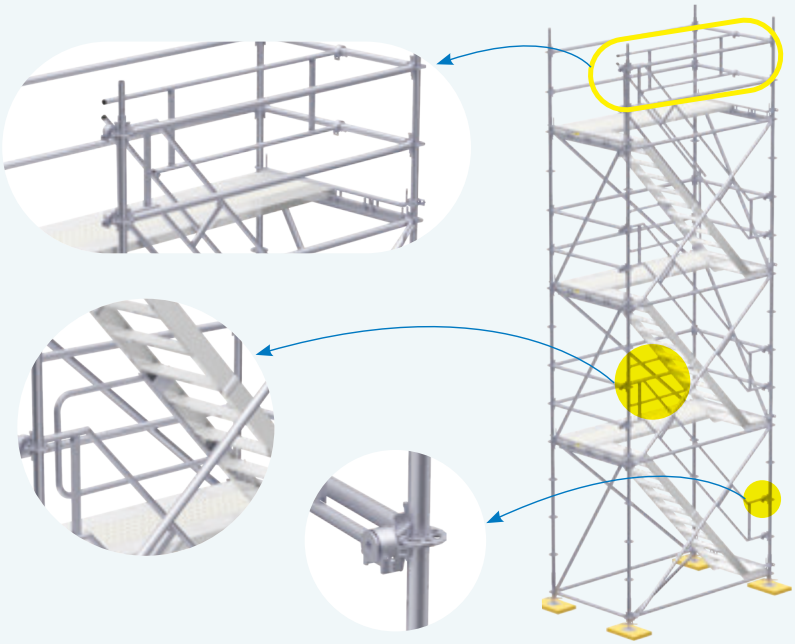

ACCESSORIES

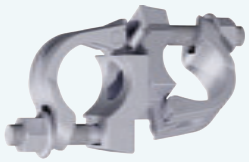

01

02

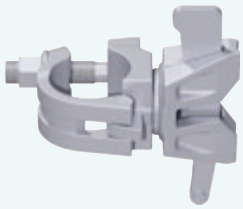

3a

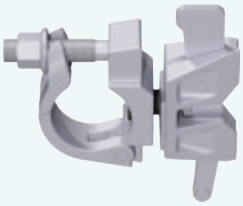

3b

APPLICATION EXAMPLE

04 DISTANCE COUPLER

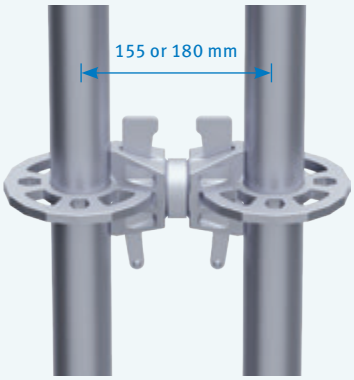

4a

05

06

07

08

09

10

11

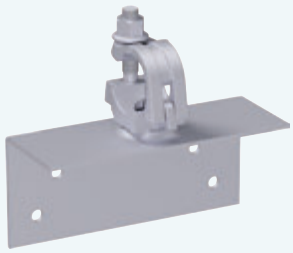

12

13

14

15

16

FIG.	DESCRIPTION			DIMENSIONS L/H×W [m]	WEIGHT approx. [kg]	ARTICLE NO.
01	**Swivel coupler***		WS 22		1.0	13 03 022
02	**Standard coupler***		WS 22		1.0	13 01 022
03	**Wedge-head coupler***	3a	fixed		1.0	41 50 000
		3b	swivelling		1.0	41 50 001
04	**Distance coupler, fixed*** ⊕	4a		155	1.1	41 50 003
		4b	(not shown)	180	1.2	41 50 002
05	**Claw coupler***		WS 22		0.9	13 10 022
06	**Halfcoupler***		WS 22		0.6	13 02 022
07	**Tension coupler with collar nut***		WS 22		1.4	13 07 022
08	**Tube connector for tension coupler**				1.0	13 08 000
09	**Universal tube connector, clampable** — consists of 2 half-shells and a screw, expanded by the screw — for connecting tubes subject to impact stress			0.24	1.7	13 08 001
10	**Distance tube** steel tube ø 48.3 mm; hot-dip galvanised — fitted to the standard with 2 standard couplers, from lengths of 1.00 m — with borehole for locking by means of linchpin when using the EIFS anchor sleeve, for distances of 1.00 m or more			0.40	1.5	13 61 040
				1.00	3.3	13 61 100
				1.30	4.2	13 61 130
				1.50	4.8	13 61 150
11	**Quick-release anchor** steel tube 48.3 mm; hot-dip galvanised — with hooks and guide plate to secure against rotation — for suspension below the deck transom			0.70	3.0	23 62 070
12	**Squared timber coupler*** HxWxD of steel bracket: 100 × 220 × 86 mm; with halfcoupler (swivelling)		WS 22		1.8	33 81 022
13	**Hexagon bolt** steel; galvanised		M 14 × 65		0.1	14 53 000
14	**Hexagon nut** steel; galvanised		M 14		0.04	73 02 003
15	**Scaffold tube, steel** ø 48.3 × 3.25 mm; hot-dip galvanised			1.00	3.5	13 51 100
				2.00	7.0	13 51 200
				3.00	10.5	13 51 300
				4.00	14.0	13 51 400
				5.00	17.5	13 51 500
				6.00	21.0	13 51 600
16	**Scaffold tube, aluminium** ø 48.3 × 4.05 mm			1.00	1.5	13 40 100
				2.00	3.0	13 40 200
				3.00	4.5	13 40 300
				4.00	6.0	13 40 400
				5.00	7.5	13 40 500
				6.00	9.0	13 40 600

NOTE *for tubes with Ø 48.3 mm; Couplers are approved by the respective manufacturer and in accordance with EN 74-1 standard.

TECHNICAL DETAILS

STRESS CAPACITY VALUES:

ALFIX MODUL METRIC SCAFFOLDING CONNECTOR with tube ledger according to approval Z-8.22-932

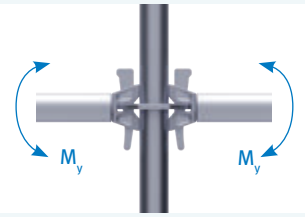

Connecting moment

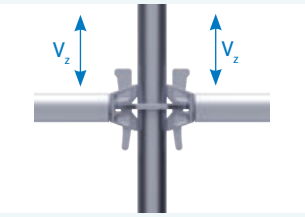

Vertical force

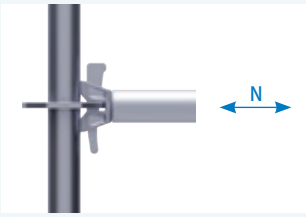

Normal force

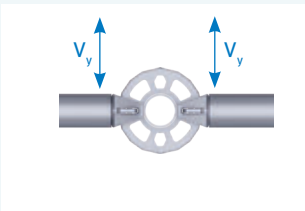

Horizontal force

ALFIX MODUL METRIC SCAFFOLDING CONNECTOR with deck bearer according to approval Z-8.22-932

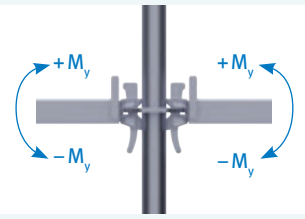

Connecting moment

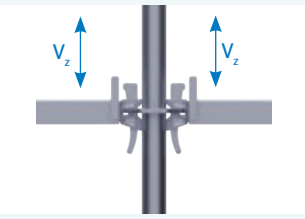

Vertical force

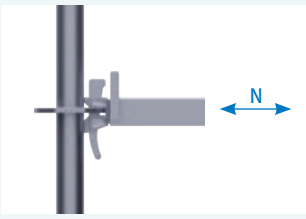

Nomrla force

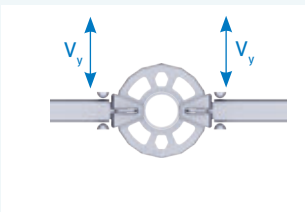

Horizontal force

Beanspruchbarkeit	ALFIX MODUL METRIC SCAFFOLDING CONNECTOR with tube ledger	ALFIX MODUL METRIC 4.0 SCAFFOLDING CONNECTOR with tube ledger	ALFIX MODUL METRIC SCAFFOLDING CONNECTOR with deck bearer
Connecting moment $M_{y,R,d}$	± 104 kNcm	± 120 kNcm	- 104 kNcm / + 69.2 kNcm
Verticla force $V_{z,R,d}$	± 35 kN	± 39.9 kN	± 30 kN
Normal force $N_{R,d}$	± 36 kN	± 39.6 kN (46.6 kN*)	± 25.6 kN
Horizontal force $V_{y,R,d}$	± 16 kN	± 16 kN	± 9.0 kN

*Connection in the small hole of the steel perforated disc

The standard scaffolding version is approved for use as a working scaffold according to load class ≤ 3 (system width b=0.739 m and bay width l=3.00 m), and as brick guard and roof brick guard in accordance with DIN 4420-1:2004-03.

The topmost horizontal plane (working area) must not exceed 24 m, plus spindle extension length above ground level. The standard version of the scaffolding system is designed for working operations at a scaffold level in accordance with DIN EN 12811-1:2004-03, Section 6.2.9.2 in front of an "open" façade with a percentage of openings of 60%, and in front of a closed façade.

Without additional verification, the standard version must only be used if the loads acting within the bays do not exceed the relevant live loads according to DIN EN 12811-1:2004-03, Table 3.

For the standard version of the "ALFIX MODUL METRIC" scaffolding system, the following designation according to DIN EN 12810-1:2004-03 shall be used:

Scaffolding EN 12810-3D-SW06/300-H2-A-LA

For assembly and disassembly of the scaffolding system, please observe the relevant regulations and rules of the employerss' liability insurance association of the construction industry (BG BAU), the accident prevention regulations (BGV 22, formerly VBG 37) and the instructions and stipulations of the DIN 4420 and/or EN 12811.

In a site-related instruction for assembly and use and based on a risk analysis in accordance with the German Industrial Safety Regulations (BetrSichV), the employer shall decide the most suitable protection against risk of falling.

This includes the use of technical fall protection equipment, personal protective equipment against falling (PPE) and special training.

ALFIX offers "advanced guardrails" as protection measure which are documented separately as well as in the respective technical documentation of the manufacturer.

If personal protective equipment (PPE) is used the following attachment points shall be used:

- guardrail/longitudinal ledger (1 m above deck level)
- standard (1 m above deck level)
- rosette (1 m above deck level)
- For further instructions on PPE please refer to DGUV Regulation 112-198 or DGUV Information 201-011.

Standard

permissible[1] standard load (compressive load) or tensile load-bearing capacity with pressed-in/screwed-in or integrated tube connector (4.0)

	COMPRESSIVE LOAD					TENSILE LOAD
Unsupported length [m]	1.0	1.5	2.0	3.0	4.0	2 × 2 M10 8.8
Permissible load N [kN] (pressed-in/screwed-in tc)	97.4	65.6	42.6	21.0	12.3	34.4 (screwed-in)
Permissible load N [kN] (integrated tc)	124.1	73.3	44.4	20.8	11.9	60.2

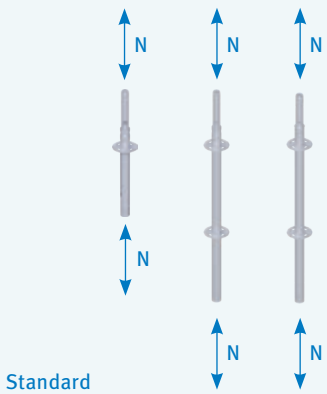

Standard

Deck bearer

permissible[1] lateral load

	DECK BEARER	DECK BEARER, reinforced	2-DECK BEARER			
Length L [m]	0.74	1.10	1.50	2.00	2.50	3.00
Permissible uniformly distributed load q [kN/m]	31.50	26.25	21.60	15.90	12.60	8.10
Individual load P [kN] in bay centre	9.00	13.35	19.35	14.10	13.35	10.50

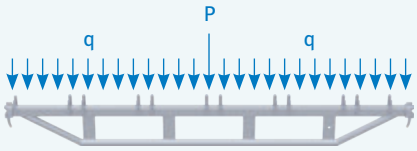

Deck bearer – permissible lateral load

Tube ledger

permissible[1] lateral load

	LEDGER	LEDGER, reinforced	DOUBLE TUBE LEDGER			
Length L [m]	0.74	1.10	1.50	2.00	2.50	3.00
Permissible uniformly distributed load q [kN/m]	32.70	25.20	24.90	15.60	9.90	7.05
Individual load P [kN] in bay centre	11.85	13.65	21.30	13.05	8.40	6.75

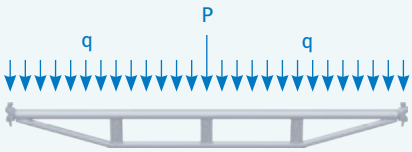

Tube ledger – permissible lateral load

Tube ledger

permissible[1] normal force (permissible tension force: 36 kN)

Bay length [m]	0.74	1.10	1.50	2.00	2.50	3.00
Permissible compressive force D [kN]	36.00	36.00	36.00	36.00	27.60	20.10

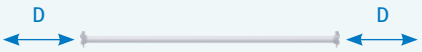

Tube ledger – permissible normal force

Vertical diagonal brace

permissible[1] normal force (bay height = 2.00 m) - refer to Technical Approval for further data

Bay length [m]	0.74	1.10	1.50	2.00	2.50	3.00
Permissible compressive force D [kN]	17.10	18.10	18.50	15.50	12.80	10.50
Permissible tensile force D [kN]	21.60	22.90	23.70	24.30	23.50	22.90

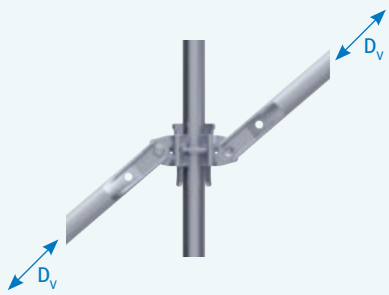

Vertical diagonal brace

1 Permissible loads are calculated with γM=1.1.
Note: Permissible loads are obtained by dividing the stress capacity by 1.5 (γF).

TECHNICAL DETAILS

Load classes of scaffolding decks

SCAFFOLDING DECKS

DESIGNATION	BAY LENGTH L (m)	BRICK GUARD AND ROOF BRICK GUARD APPLICATIONS	ASSIGNMENT OF DECKING TO LOAD CLASSES	
Steel deck 0.32 m	≤ 2.00	permissible	6	
	2.50	permissible	5	
	3.00	permissible	4	
	4.00	permissible	3	
Wooden deck 0.32 m	≤ 1.50	permissible	6	
	2.00	permissible	5	
	2.50	permissible	4	
	3.00	permissible	3	
Solid aluminium deck 0.32 m	≤ 2.00	permissible	6	
	2.50	permissible	5	
	3.00	permissible	4	
	4.00	–	2	
Lightweight deck 0.64 m	1.50	permissible	4	
	2.00	permissible	4	
	2.50	permissible	4	
	3.00	permissible	3	
Frame platform 0.64 m film-coated plywood decking	≤ 3.00	permissible	3	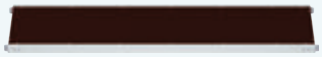
Access deck with ladder 0.64 m film-coated plywood decking	≤ 3.00	permissible	3	
Access deck with ladder 0.64 m chequer plate decking	2.50	permissible	3	
	3.00	permissible	3	
Access deck without ladder 0.64 m film-coated plywood decking	≤ 3.00	permissible	3	

Parameters of horizontal diagonal braces

Extract of approval no. Z–8.22–932 (refer to Technical Approval for further data)

HORIZONTAL DIAGONAL BRACES

BAY LENGTH (m)	BAY WIDTH (m)	$N_{H,R,D}$ (kN)
2.00	0.74	3.03
2.50	0.74	3.00
3.00	1.10	2.95

Cross-sectional values of base jacks

The substitute cross-sectional values of base jacks for the stress and deformation analyses according to DIN 4425 are to be assumed as follows:

BASE JACK

$A = A_S$	=	3.52 cm²
I	=	4.00 cm⁴
W_{el}	=	2.68 cm³
W_{pl}	=	1.25 × 2.68 = 3.35 cm³

EXTRACTS FROM THE DIN EN 12811 STANDARD

Service loads on working areas

WORKING AREAS

LOAD CLASS	UNIFORMLY DISTRIBUTED LOAD q_1 in kN/m²	CONCENTRATED LOAD ON AREA 500 mm X 500 mm F_1 in kN	CONCENTRATED LOAD ON AREA 200 mm X 200 mm F_2 in kN	PARTIAL AREA LOAD q_2 in kN/m²	Partial area factor a_p [1])
1	0.75	1.50	1.00	–	–
2	1.50	1.50	1.00	–	–
3	2.00	1.50	1.00	–	–
4	3.00	3.00	1.00	5.00	0.4
5	4.50	3.00	1.00	7.50	0.4
6	6.00	3.00	1.00	10.00	0.5

Headroom classes

WORKING AREAS

CLASS	HEADROOM		
	between working areas h_3	between working areas and transoms or tie members h_{1a} and h_{1b}	clear shoulder height h_2
H_1	$h_3 \geq 1.90$ m	$1.75 \text{ m} \leq h_{1a} \leq 1.90$ m $1.75 \text{ m} \leq h_{1b} \leq 1.90$ m	$h_2 \geq 1.60$ m
H_2	$h_2 \geq 1.90$ m	$h_{1a} \geq 1.90$ m $h_{1b} \geq 1.90$ m	$h_2 \geq 1.75$ m

Width classes

WORKING AREAS

WIDTH CLASS	w in m
W06	$0.6 \leq w \leq 0.9$
W09	$0.9 \leq w \leq 1.2$
W12	$1.2 \leq w \leq 1.5$
W15	$1.5 \leq w \leq 1.8$
W18	$1.8 \leq w \leq 2.1$
W21	$2.1 \leq w \leq 2.4$
W24	$2.4 \leq w$

Headroom and width classes of working areas

b	width of passage clearance, 500 mm is the minimum requirement, and (c - 250 mm)
c	width of clearance between standards
h_{1a}, h_{1b}	width of clearance between working areas and transoms or tie members
h_2	clear shoulder height
h_3	clear height between working areas
p	clear width in the head area; 300 mm is the minimum requirement, and (c - 450 mm)
w	width of working areas

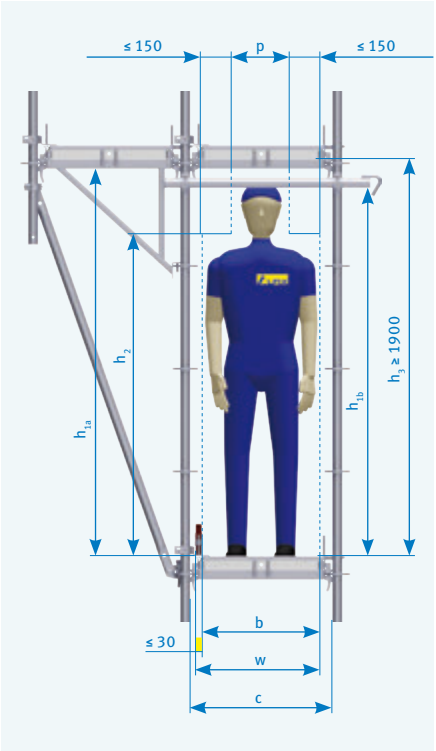

Designation of scaffolds according to the standard EN 12810-1

Example: Scaffold EN 12810 – 3 D – SW06/250 – H2 – A – LA

Scaffold EN 12810	Frame scaffold (system scaffold) according to DIN EN 12810-1
3	Load class 3 (see Table 3 DIN EN 12811-1)
D	Drop tests on platforms (D = with drop test, N = without drop test)
SW09/250	System width class (see table 1 DIN EN 12811-1); here: between 0.90 m and 1.20 m/bay length 2.50 m
H2	Headroom class (see Table 2 DIN EN 12811-1)
A	without cladding (A = without cladding, B = with cladding)
LA	with ladder (LA = ladder, ST = stairway, LS = both)

NOTES

SKETCHES

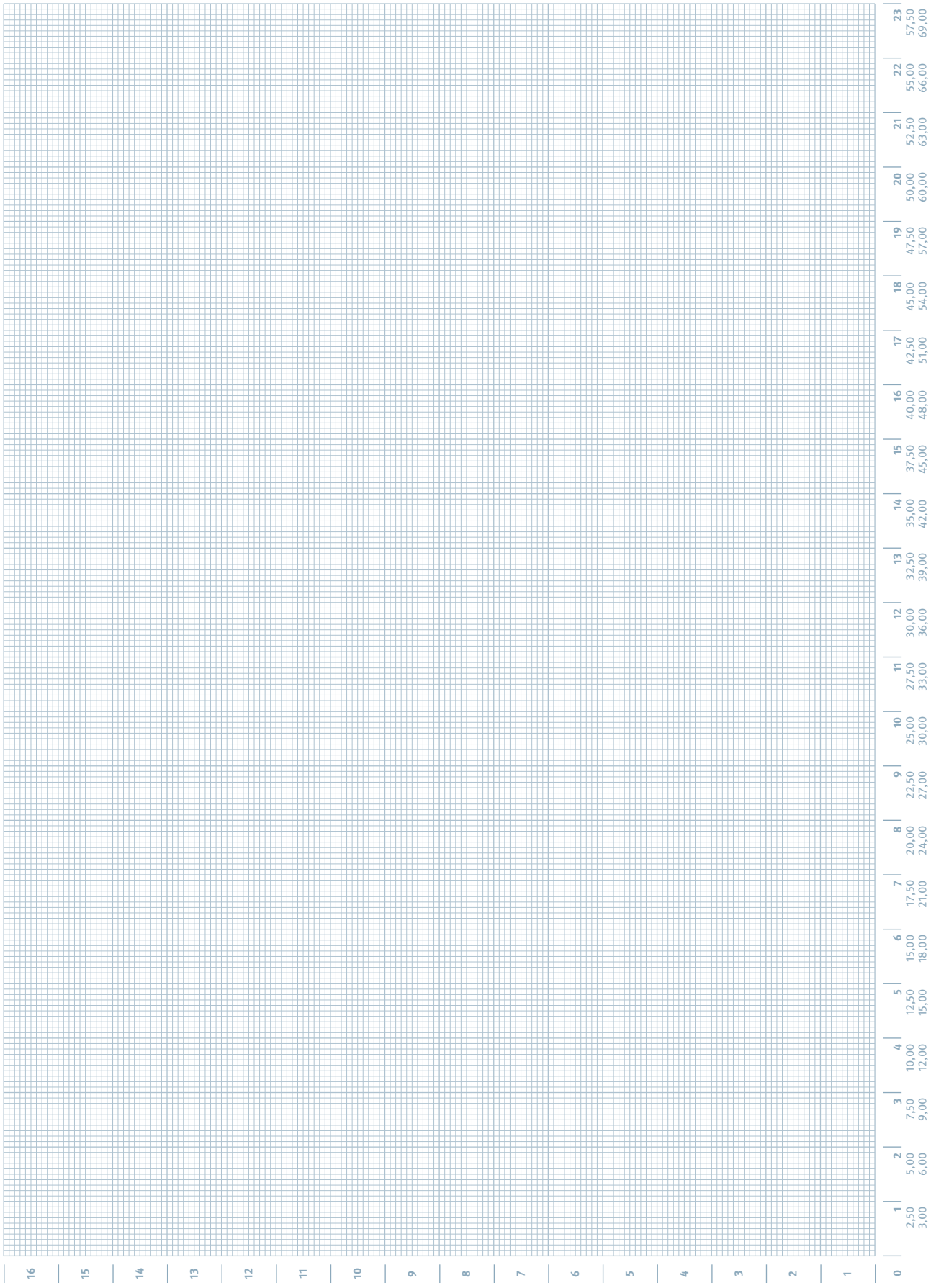
16
15
14
13
12
11
10
9
8
7
6
5
4
3
2
1
0
1 2,50 3,00
2 5,00 6,00
3 7,50 9,00
4 10,00 12,00
5 12,50 15,00
6 15,00 18,00
7 17,50 21,00
8 20,00 24,00
9 22,50 27,00
10 25,00 30,00
11 27,50 33,00
12 30,00 36,00
13 32,50 39,00
14 35,00 42,00
15 37,50 45,00
16 40,00 48,00
17 42,50 51,00
18 45,00 54,00
19 47,50 57,00
20 50,00 60,00
21 52,50 63,00
22 55,00 66,00
23 57,50 69,00

www.alfix-systems.com

ALFIX GmbH
Langhennersdorfer Straße 15
D-09603 Großschirma

Phone +49 (0) 37328 / 800-100
Fax +49 (0) 37328 / 800-199
eMail: info@alfix-systems.com

SALE OF:

- Working and safety scaffolds
- Mobile scaffold towers
- Temporary roofs
- Chimney scaffolds
- Accessories

LEASING OF:

- Working and safety scaffolds
- Temporary roofs

Edition: October 2023